Husbandry Guidelines
For

Goodfellow's Tree-Kangaroo

Dendrolagus goodfellowi

Mammalia: Macropodidae

Compiler: Diane Dominique
Date of Preparation:
Western Sydney Institute of TAFE, Richmond
Course Name and Number: Captive Animals Certificate III RUV30204
Lecturer: Graeme Phipps/Jacki Salkeld/Brad Walker

Disclaimer

These husbandry guidelines were produced by the compiler/author at TAFE NSW – Western Sydney Institute, Richmond College, N.S.W. Australia as part assessment for completion of Certificate III in Captive Animals, Course number 1068, RUV30204. Since the husbandry guidelines are the result of student project work, care should be taken in the interpretation of information therein, - in effect, all care taken but no responsibility is assumed for any loss or damage that may result from the use of these guidelines. It is offered to the ASZK Husbandry Manuals Register for the benefit of animal welfare and care. Husbandry guidelines are utility documents and are 'works in progress', so enhancements to these guidelines are invited.

TABLE OF CONTENTS

Occupational Health and Safety Considerations

Goodfellow's Tree-kangaroo is classified as non-hazardous or innocuous.

However keepers should be aware of the strong forelimbs and sharp, curved claws in the species as they are capable of delivering painful blows and kicks which may cause injury.

Keepers should also be aware of zoonoses (refer to chapter 8.4) such as Salmonellosis, Dermatomycoses ("ringworm"), Hydatid Disease and take reasonable precautions to prevent these.

1 Introduction

Tree kangaroos (*Dendrolagus spp.*) are very different from the other members of the Macropodidae family because they live an arboreal existence. They are similar to the other members of the kangaroo family in many respects, but, because of their habitat preferences, they were mistaken for monkeys by early European explorers (Hutchins et al. 1990, cited in Blessington and Steenberg, 2007).

There are ten species of tree kangaroos (Flannery *et al.*1996), that live in rainforest habitats in Irian Jaya, Papua New Guinea, and northern Queensland, Australia.

Two species, *D. lumholtzi* and *D. bennettianus* are found in Australia, while eight are found in Papua New Guinea, one of which is Goodfellow's Tree-kangaroo.

Although *D. goodfellowi* is more difficult to maintain than other species of Tree-kangaroo, it has been successfully kept and bred in captivity.

Breeding groups of Tree-kangaroo were primarily established in Papua New Guinea, Baiyer River Sanctuary. This was carried out for the purpose of propagation as a conservation tool (George, 1982).

The most significant predators of tree kangaroos in recent times are humans, though, the New Guinea highland dog, domestic dogs, large pythons, and raptorial birds are also threats (Hutchins et al. 1990, cited in Blessington and Steenberg, 2007). Habitat destruction is another reason why many *Dendrolagus* species are now being threatened.

There are three sub-species of Goodfellow's Tree-kangaroo, *D. goodfellowi goodfellowi*, *D. goodfellowi buergersi*, *D. goodfellowi pulcherrimus*. The status for *D. goodfellowi goodfellowi* and *D. goodfellowi buergersi* is endangered and *D. goodfellowi pulcherrimus* is critically endangered.

1.1 ASMP Category

ASMP Papua New Guinea Fauna TAG; No Regional Program; Management Level 3

TAG notes: TAG currently discussing option of deleting Matchies Tree-kangaroo by attrition and Goodfellow's being regional priority (ASMP, 2007).

1.2 IUCN Category

All three subspecies of Goodfellow's Tree-kangaroo are classified as endangered (EN) EN A1a by The International Union for the Conservation of Nature (IUCN 2006).

ENDANGERED (EN) - A taxon is "Endangered" when it is not Critically Endangered but is facing a very high risk of extinction in the wild in the near future.

A) Population reduction in the form an observed, estimated, inferred or suspected reduction of at least 80% over the last 10 years or three generations, (whichever is the longer), based on direct observation (IUCN, 2006).

1.3 EA Category

Not applicable.

1.4 NZ and PNG Categories and Legislation

International Trade (Fauna and Flora) Act 1979
Fauna (Protection and Control) Act 1966

1.5 Wild Population Management

Planned category: Population Management Program; Management Level 1a.
Able to import Goodfellow's from AZA institutions. Plan to import from PNG to support Rainforest Habitat (ASMP, 2007).

1.6 Species Coordinator

ARAZPA Species Coordinator (*Dendrolagus goodfellowi*): Gert Skipper, ADELAIDE
EAZA Species Coordinator (*Dendrolagus*): Mr. Martin van Wees, ROTTERDAM
AZA Species Coordinator (*Dendrolagus*): Ms. Valerie Thompson, SANDIEGO

(ASMP, 2007).

1.7 Studbook Holder

WAZA International Studbook Keeper (*Dendrolagus goodfellowi*): Ilaiah Bigilale, BOROKO
AZA Studbook Keeper (Dendrolagus): Melissa Rodden, NZP-CRC

(ASMP, 2007).

2 Taxonomy

2.1 Nomenclature

Class: Mammalia
Order: Diprotodonta
Family: Macropodidae
Genus: *Dendrolagus*
Species: *goodfellowi*

Etymology
Genus: Dendron = tree, Lagos = hare
Species: named in honour of the collector of the holotype, Walter Goodfellow

2.2 Subspecies

Goodfellow'sTree-kangaroo has three subspecies, which include:
Dendrolagus goodfellowi goodfellowi (Central Cordillera and outliers from Milne Bay to Wau)
Dendrolagus goodfellowi buergersi(Central Cordillera between Wau and Mount Bubiari)
Dendrolagus goodfellowi pulcherrimus (Torricelli and Foja Mountains)

2.3 Recent Synonyms

Dendrolagus goodfellowi shawmayeri

2.4 Other Common Names

Goodfellow's Tree-kangaroo
Ornate Tree-kangaroo
Yemma, Timboyok (Mianmin, Sandaun Province)
Waiman (Sibilanga area, Sandaun Province)
Wolo (Daribi, Chimbu Province)
Golden-mantled Tree-kangaroo

3 Natural History

Breeding groups of Tree-kangaroo were primarily established in Papua New Guinea for the propagation of animals as a conservation tool and for export to European zoos for which there was high demand. Although *D. goodfellowi* is more difficult to maintain than other species of Tree-kangaroo, it has been successfully kept and bred. There have been records of Tree-kangaroos living longer than 14 years, indicating that a reproductive life of 10 years could be expected (George 1982)

Captive bred animals have a better chance of surviving transportation and establishing successful breeding groups than wild caught individuals and wild caught *D. goodfellowi* are known to take longer to settle down and breed in captivity (George 1982).

Sexual maturity is reached at 2 years of age with no defined breeding season. The oestrous cycle has been estimated at 54 days with a gestation period of about 45 days. Once the joey is born, it will remain in the pouch for 10 months and at foot for another 2-3 months (Zoological Parks and Gardens Board of Victoria 2004).

Active management, requiring adequate space is recommended for the successful reproduction of Tree-kangaroos. Co-operative breeding programmes have been established between zoos, allowing for the interchange of animals to start new breeding groups. Because of aggression in males, most zoos request a ratio of one male for every two or three females (George 1982).

3.1 Morphometrics

3.1.1 Mass And Basic Body Measurements

Males	Measurements	Females	Measurements
Head-body	574 – 625 mm	Head-body	560 – 635 mm
Tail	645 – 760 mm	Tail	585 – 760 mm
Hindfoot	112 – 125 mm	Hindfoot	105 122 mm
Ear	54 – 60 mm	Ear	55 – 66 mm
Weight	8.0 – 9.5 kg	Weight	7.0 – 8.5 kg

3.1.2 Sexual Dimorphism

Males and females are similar in size and pelage.

3.1.3 Distinguishing Features

Dendrolagus goodfellowi is easily distinguished from other species of Tree-kangaroo (Flannery 1995). It is mostly a warm brown/red in colour, with golden yellow limbs and a long mottled golden and brown, non-prehensile tail (Zoological Parks and Gardens Board of Victoria 2004). Its soft, short coat and the presence of two golden rump stripes is also a distinguishing factor (Flannery 1995)

Goodfellow's Tree kangaroo is smaller than other species, with males weighing 8.0 – 9.5 kg and females, 7.0 – 8.5 kg (Martin 2005), when compared to the Grizzled Tree-kangaroo, reaching average weights of 17kg in males and 11.4 kg in females.

The placement of dorsal hair whorls in *D. goodfellowi* is another morphological characteristic that can be used to separate the species from other Tree-kangaroos. *Both D.goodfellowi* and *D. matschiei* have hair whorls on the center of the back, as opposed to the root of the tail (*D. dorianus*) or on the shoulders (*D. ursinus, D. inustus, D. bennettianus, D. lumholtzi*).

3.2 Distribution and Habitat

Goodfellow's Tree-kangaroo is known on the lower to mid-montane rainforests of Papua New Guinea, (Martin 2005). It can be found on the north and south sides of the Central Cordillera, the Torricelli Mountains and the Foja Mountains of Irian Jaya (Flannery 1995).

It is mainly an inhabitant of *Castanopsis* (Oak) – rich forests, at altitudes between 1000 – 3000 metres (Zoological Parks and Gardens Board of Victoria 2004; Flannery 1995).

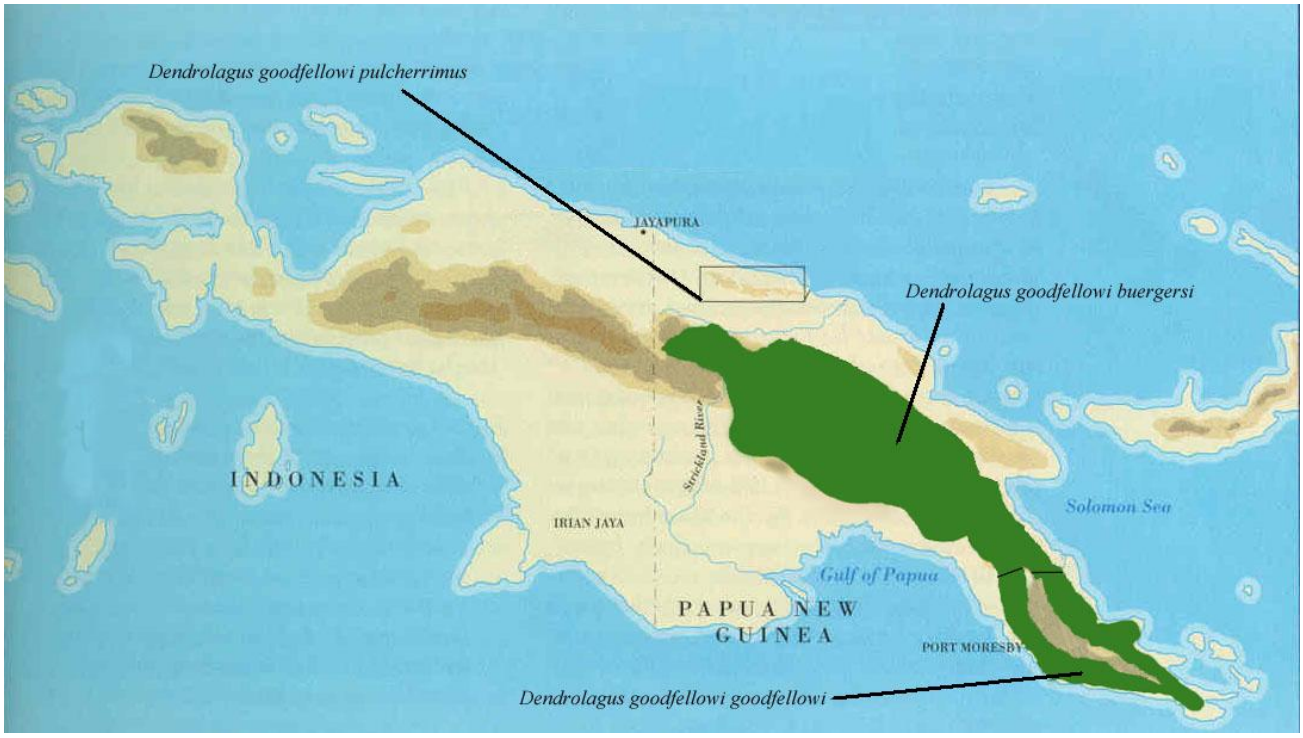

Figure 1. Distribution map of 3 sub-species of *D. goodfellowi (D. goodfellowi goodfellowi, D. goodfellowi beurgersi, D. goodfellowi pulcherrimus).*

3.3 Conservation Status

Many populations of the once widespread Goodfellow's Tree-kangaroo have disappeared and many others are on the verge of extinction (Martin 2005).

The Tree-kangaroos of Papua New Guinea are threatened by over-hunting and loss of habitat. As tree-kangaroos have a very low rate of reproduction, their populations are very susceptible to overkill (when deaths outnumber births). The oak forest zone is also modified for agriculture throughout most of New Guinea, making deforestation and forest degradation the second biggest threat facing New Guinea tree-kangaroos (Flannery 1995; Martin 2005).

All threes subspecies of Goodfellow's Tree-kangaroo are classified as endangered (EN) by The International Union for the Conservation of Nature (IUCN 2006). http://www.iucnredlist.org/

3.4 Diet in the Wild

Goodfellow's Tree-kangaroos are folivores, consuming 91 known food plants, as well as seasonal fruits, herbs and sedges (Melbourne Zoo). Tree-kangaroos also spend a large amount of time on the ground, indicating that terrestrial herbage makes up a large part of their diet (George 1982).

Goodfellow's Tree-kangaroo found below 1500 metres, below Mount Karimui favour the leaves and roots of *Poikilospermum amboinse* and the leaves and fruit of *Mussaenda ferruginea*. Wild figs are also consumed (Flannery 1995).

3.5 Longevity

3.5.1 In the Wild

Goodfellow's Tree-kangaroos live for approximately 8 years in the wild (Grzimek, B., 1990)

3.5.2 In Captivity

Goodfellow's Tree-Kangaroos have a life span of over 14 years in captivity (Currumbin Wildlife Sanctuary, Flannery 1996)

3.5.3 Techniques Used to Determine Age in Adults

A wide range of measurements have been applied to marsupials with varying methods of application. Head length is determined to be the most reliable determinant of age in young marsupials, with leg length, and arm and foot length as accurate indicators also. However, ear and tail length are unreliable (ARAZPA 1998).

Body weight is also considered to be an unreliable indicator of age as it can vary significantly in response to environmental and dietary factors (ARAZPA 1998).

Edwards M. S. and Ward A. (2001) used crown-rump, tail and hind foot measurements to estimate the age factor of *D. goodfellowi* at San Diego Zoo.

4 Housing Requirements

4.1 Exhibit/Enclosure Design

Before housing tree kangaroos for the first time, the institution that is designing a new exhibit should fill out a “Facility Review Checklist” to help in the planning process (refer to Appendix D). The survey will be reviewed by a committee of the Tree-Kangaroo Species Survival Plan to help ensure that the special needs of tree kangaroos are met.

Goodfellow’s Tree kangaroos need large, roomy enclosures with extra height for climbing and jumping. The Even though New Guinea species are less agile than Australian Tree-kangaroos, their acrobatic abilities should not be taken lightly (George 1982). It was recommended that the minimum space for an enclosure should be 6 x 3 x 3 m (Steenberg 1993) suggested in its “Basic Care and Housing Standards”

It is important for the well being of Goodfellow’s tree kangaroo that the natural conditions under which this species survives in the wild is taken into account when it is housed in captivity. Social interactions in the wild, humidity, temperature and shade are just some of the factors to consider (Blessington and Steenberg, 2007).

From what is currently known about tree kangaroo social interactions, it is recommended that males be kept separate from other males at all times (Blessington and Steenberg, 2007 and George, 1982).

Another housing consideration for tree kangaroos is accommodation for pouch-gravid females. The safest way to avoid harassment from other animals is to separate members of the same species prior to giving birth (Blessington and Steenberg, 2007).

The Tree-kangaroo Species Survival Plan recommends that substrate in a tree kangaroo enclosure is layered on the ground to add support for trees and poles, cushion an animal when it falls, filter particulate matter, and create a more aesthetically pleasing exhibit for the public.

It is especially important for institutions with breeding programs to have a layered substrate because young joeys tend to be unsteady when first exiting the pouch. If joeys fall from their perches, this extra padding increases their chance for survival.

Some recommended base materials include concrete with a synthetic resin surface, gunnite rock and other artificial rocks, solite, epoxide, and metal fabric. Layered substrates include sand, hay/straw, plastic foliage, crushed limestone, pea gravel, wood chips, leaf litter, peat, pine bark, white cedar mulch, and natural soil and grass.

Care should be taken when incorporating mesh fencing in Tree-kangaroo exhibits as nail sheaths can get pulled off as a result of getting stuck in the mesh. The recommended size is 1inch x 1 inch mesh, although 2 inch x 4 inch mesh has been used successfully at Woodland Park Zoological Gardens (Blessington and Steenberg, 2007).

Inhabiting dense rainforests, tree kangaroos need shade and cannot tolerate prolonged direct sunlight or dry heat. Enclosures should be built to provide plenty of shade while still allowing some areas of natural light.

Furnishings help replicate an animal's natural environment. Vertical and horizontal branches (10-15 cm in diameter) for climbing, and platforms for sleeping and feeding (at least 0.5 meters wide by 0.9 to 1.8 meters long), should be included in an exhibit. Branches should be arranged to allow one animal to get out of the way of another, and to avoid dead-end situations.

Care must be taken to avoid the use of water moats in Tree-kangaroo exhibits as animals have drowned in the past.

The floors in a tree kangaroo enclosure should either be sloping for drainage, or contain drains which allow the surface to dry completely and quickly.

Feeding stations should be up off the ground, and be easily reached by the Keeper, for pan removal and cleaning. The perches and platforms around the feed pans will usually require more frequent cleaning. Food and water pans should be removable and washed/disinfected daily.

(Jackson, 2003, Blessington and Steenberg, 2007, George, 1982).

4.2 Holding Area Design

The holding area for Goodfellow's Tree-kangaroo needs to be well covered and secure, ensuring that there are no holes or damage to walls. As in the main exhibit/enclosure, tree-kangaroos need a series of interconnecting rough barked branches (Jackson 2003). Because of their tough feet, concrete or compacted dirt floors can be used to facilitate cleaning (Martin 2003).

Holding facilities require feeding platforms and heavy plywood sleeping shelves as nocturnal behaviour of captive tree-kangaroos typically consists of feeding, dwelling on the ground, and sleeping or resting (George 1982). Poles and branches should be placed provide tree-kangaroos with access to feeding platforms.

4.3 Spatial Requirements

From a radio tracking study of a Matschie's Tree-kangaroo, the home range size was estimated to be 25 hectares, while a dung pellet count indicated a usage between 0.7 and 1.6 hectares of forest to meet nutritional and social needs (Martin 2003).

In captivity males can be maintained with several females in the same enclosure, but more than one male cannot be kept in the same breeding group (George 1982).

According to EAPA (1986) each exhibited tree-kangaroo must be provided with 15 lineal metres of climbing structure/tree and be able to attain height of at least 2.5 metres.

Table 1. Minimum enclosure sizes (adapted from EAPA 1986).

Genus	Common Name	Head-Body Length (cm)1	Total Length (cm)	Minimum Enclosure Area (m2)	Minimum Enclosure Height (cm)	Additional Floor Area for Each Extra Animal (m)
Dendrolagus	Tree Kangaroo	75	155	40	200	3.20 x 3.20

4.4 Position of Enclosures

The enclosure should be positioned so that an ambient temperature of 18 – 22 ºC can be maintained, higher than this and they can suffer from heat stress and too much below, and they can suffer from hypothermia (Jackson 2003).

4.5 Weather Protection

Tree-kangaroos must be provided with a means of sheltering from wind, rain and extremes of temperature and sunlight (EAPA 1986). This requirement may be fulfilled by providing a combination of elevated platforms, at least 2m off the ground with shelter (Jackson 2003) and external plantings

4.6 Temperature Requirements

Goodfellow's Tree-kangaroo is adapted to the mountain forests of New Guinea and may react unfavourably to warmer conditions by licking the forearms to reduce body heat (George 1982). Temperatures should be maintained at 18 – 22 ºC. Higher than this and they can suffer from heat stress and too much below, and they can suffer from hypothermia (Jackson 2003). The humidity should also be kept above 50% to discourage the development of a dry and scaly tail (Jackson 2003). Inadequate housing and cold, wet and windy conditions can lead to death in captivity (Martin 2005).

4.7 Substrate

The substrate must be easy draining, compacted inert material which is non-abrasive to macropod feet (EAPA 1986).

Due to their arboreal nature and tough feet, concrete flooring can be used (Jackson 2003). River gravel has also been used as cage flooring (George 1982).

4.8 Nestboxes and/or Bedding Material

Bedding material should be simple and easy to keep clean. Hessian sacks are ideal as bedding material, providing a comfortable surface and can be hung up to dry when holding pens are vacant (Taronga Zoo, Sydney; pers. Comm.)

Hessian sacks used as bedding must be intact with no holes present or a large weave. Goodfellow's Tree-kangaroos have extreme claw development that is also wickedly curved (Martin 2005).

4.9 Enclosure Furnishings

Goodfellow's Tree-kangaroos are arboreal and need appropriate branches for climbing (rough barked branches approximately 10 – 15 cm in diameter) (Jackson 2003).

A framework of interconnecting tree, ropes and climbing apparatus should be provided for tree-kangaroos in captivity, ensuring that smooth branches are replaced or re-notched to provide the tree-kangaroo with good grip (Jackson 2003).

The requirement for naturalistic climbing structures must be met by providing a selection of stout, forked branches, low vertical logs and inclined branches to ensure a variety of arboreal pathways (EAPA 1986).

Other exhibit furniture such as rocks can be incorporated within the exhibit design taking precaution that open enclosures have a safety margin between any perches and the enclosing wall (George 1982).

5 General Husbandry

5.1 Hygiene and Cleaning

Daily Cleaning Routine

- Rake exhibit while Tree-kangaroo is still in holding pen.
- Remove any fallen browse or fallen food from the previous day
- Empty water trough, scrub and refill with fresh water
- Remove feeding dish from platform
- Use dust pan and brush to remove any food scraps and faeces from platform
- Shake out Hessian sack bedding and lay out flat on platform

*****Unlock holding pen and allow access to main exhibit - Close access panel while cleaning holding area*****

- Rake holding pen floor removing fallen food, fallen browse and faeces
- Clean and refill water dishes
- Remove feeding dish from previous day
- Use dust pan and brush to clean sleeping platform
- Shake out Hessian sack bedding and hang up in the sun
- Clean exhibit glass with window cleaner and water

Weekly Cleaning Routine

- Scrub platforms with water and mild detergent only
- Replace Hessian sacks with fresh bedding material
- Remove weeds from exhibit and holding area
- Provide fresh eucalypt browse on exhibit and in holding pen

As required

- Check integrity of climbing branches and horizontal perches and replace when necessary
- Pest control
- Oil locks

Tree kangaroo enclosures should be spot-cleaned daily to remove faeces and body secretions from walls and perches. The substrate should be changed regularly to prevent a bacterial buildup (Blessington and Steenberg, 2007)

Branching, perches and platform should be scrubbed routinely (Blessington and Steenberg, 2007) with safe cleaning agents.

Safe cleaning/disinfecting agents include:

F10SC Veterinary Disinfectant (Health and Hygiene Pty Ltd) – On sleeping and feeding platforms, exhibit furniture and feeding dishes
Unique Pine Detergent (Cleantec Pty Ltd) – On sleeping and feeding platforms and exhibit furniture
Animal House – On sleeping and feeding platforms and exhibit furniture

No cleaners or disinfectants that are corrosive, irritating or toxic may be used to sanitize tree-kangaroo enclosures or exhibit furniture including bleach or harsh industrial cleaners.

5.2 Record Keeping

Animal exhibitors are required to keep an up-to-date record of all the vertebrate animals they hold. This information should be recorded in an Animal Record Book or "Daily Diary". Records must be kept for:

- Any illness, disease, injury or other poor health of animals
- The day to day progress or regress of animals
- Medical or other treatment administered to the animals
- Transactions into or out of the collection (including births and deaths)
- Behavioral changes
- Training session report/outcome
- Changes in diet
- Reproductive behaviour

(EAPA 1986, Jackson 2003).

5.3 Methods of Identification

Passive Integrated Transponder (PIT) tags

PIT tags or microchips are implanted subcutaneously, between the scapulae of individuals, and can be scanned with a PIT tag scanner. This provides a permanent method of identification and allows institutions to permanently mark animals internally without altering external appearance. The small size of PIT tags has little or no influence on growth-rate, behavior, health.

Visual identification

One of the most distinguished features of Goodfellow's Tree-kangaroos is the various patterns that form on the tail. These patterns can be used to identify various individuals as no two animals have the same markings (Currumbin Wildlife Sanctuary).

5.4 Routine Data Collection

Data collection can be in the nature of:

- Weight measurements (Tree-kangaroos can be conditioned to stand on scales with food reinforcements)
- Faecal samples (to determine reproductive status, disease, general health)
- General observations of behaviour
- Behaviour during training sessions (attentive or distracted)

(Taronga Zoo, Sydney)

6 Feeding Requirements

6.1 Captive Diet

Tree kangaroos are described as browsing herbivores, and have a large sacculated stomach for foregut fermentation of a bulky diet of vegetation (George 1982). The diet of free-ranging tree kangaroos consists primarily of tree foliage as well as ferns, rainforest fruits, bark, insects, moss, flowers and occasionally, bird's eggs (Zoological Parks and Gardens Board of Victoria, 2004).

Diets offered to tree kangaroos vary between European, North American and Australian zoos. This is because animals require nutrients delivered by the ingredients of the diet, but do not have a requirement for specific ingredients in the diet (Edwards & Ward, 2001). Parks and Zoos will use the ingredients that deliver the correct nutrients for Tree-kangaroos, depending on what is available in the region and between seasons.

Several zoos have reported using a high-fiber apple biscuit which was developed as a diet for leafeater primates (Mullet, Yoshimi, & Steenberg, 1990).

Zoological Society of San Diego

The diet offered to *D. goodfellowi* at the Zoological Society of San Diego (ZSSD) are based upon two complete feeds, a higher fiber primate biscuit and an alfalfa-based lower fibre (ADF- 16) herbivore pellet

To complement these feeds, a rotation of vegetable materials are presented daily. These vegetables include a type of leafy green vegetable, a root vegetable, and a third vegetable. Only a small, controlled portion of fruit is offered daily (see Table 6.1 for weekly feed schedule).

Finally, the animals are offered a one meter section of browse material daily. The browse is considered a supplement to the diet, and is not relied upon to deliver any specific nutrients.

Table 6.1. Weekly food items for adult *D. goodfellowi* at Zoological Society San Diego.

Food Item	Amount (g)
Low fibre herbivore pellet	215.0
Leafeater biscuit3	34.0
Spinach	176.7
Kale	139.6
Greens, collard	129.7
Greens, dandelion	236.3
Turnip	25.0
Carrot	35.0
Yam	25.0
Green beans	30.0
Corn, on cob	88.2
Broccoli	75.5
Tomato	100.0
Celery	24.0
Banana, with peel	81.5

Melbourne Zoo, Australia

The daily diet offered daily consists of 1 cup Wombat pellets and a variety of 2 fruits, 4 vegetables and greens. Browse is fed out daily (Melbourne Zoo, 2006).

Fruits and vegetables are chosen from items in Table 6.2a. Greens are chosen from Table 6.2b and browse species from Table 6.2c.

Table 6.2a. Fruits and vegetables incorporated in diet of *D. goodfellowi. (highlighted items are used for conditioning and are not incorporated in the daily diet).*

Apple	Pumpkin
Carrot	Avocado
Banana	Sweetcorn
Sweet Potato	Grapes
Orange	Yellow squash
Broccoli	Mango
Kiwi Fruit	Zucchini
Eggplant	Apricot
Pear	Mushroom

Table 6.2b. Green vegetables incorporated in diet of *D. goodfellowi*

Cos Lettuce	Chickory
Spinach	Fresh Lucerne*
Endives	

*fresh Lucerne when available is fed out twice a week

Table 6.2c Browse species incorporated in diet of *D. goodfellowi*

Coprosma	Tree Lucerne
Ash	Mulberry
Sparmania in flower	*Brachychiton*
Chinese Lantern	Banana
Liquid Amber	Wild Cabbage
Prunus	Native Ginger (inflorescence)

(Melbourne Zoo, 2006)

Woodland Park Zoological Gardens

At Woodland Park Zoological Gardens (WPZG) various types of browse are fed (Table 6.3a). Browse is offered twice a day in order to maintain freshness and to provide the animals with activity as well as an adequate supply throughout the day (Mullet, Yoshimi, & Steenberg, 1990)

Table 6.3a Browse fed to tree kangaroos

Elm (Ulmes),	maple, except for red *(Acer*)
willow (*Salix*),	alder (*Alnus*)
Escallonia	various species of Bamboo*
Ficus	

*Bamboo leaves dry out quickly and is not a favorite browse item since they prefer fresh browse.

The amount of food fed to each animal varies according to their weight and reproductive state. Approximate amounts per animal are listed in Table 6.3b.

Tree kangaroos have access to mineralized salt block and bowls of water which are secured in the trees.

Table 6.3b. Food items and quantities fed at Woodland Park Zoological Gardens

AM Diet	
Food Item	**Quantity**
stalks celery	1.5
Yam*	50 g.
Kale	50 g
Custom herbivore pellets with selenium	1/3 cup
Loose tea leaves (sprinkled over dampened pellets).	1/2 Tbsp
PM Diet	
Apple	40 g
Carrot	80 g
Celery	60 g
Kale	115 g
Corn on the cob*	20 g

* Favorite items are hand fed to condition animals to come down to lower levels of the exhibit. This allows keepers to observe animals closely.

Sedwick County Zoo – Wichita, KS

Table 6.4. Food items given to the Tree-kangaroo at Sedwick County Zoo
(K. Redman & J. Steenberg 1985, cited in Woodland Park Zoo, 1990)

AM Diet	
Food Item	**Quantity**
Lettuce	¾ head
Alfalfa leaves	
PM Diet	
lettuce	¾ head
Peeled banana	1
Carrots	2
Sweet potato	1
Apple	½
Ribs of celery	2
Hydroponic grass	
Monkey chow	½ cup
Tea leaves	¼ cup
Vitamin supplement	

Healesville Sanctuary, Victoria (Australia)

Table 6.5.Food items fed out to the Tree-kangaroo at Healesville Sanctuary (George, 1982).

carrot tops	Wallaby pellets
fern leaves	Dog chow
endive	Salt licks
Chinese cabbage	Sweet potato tubers
Comfrey	Cucumber
Jerusalem artichoke tops	Maize
sweet potato vine	Banana
Oat grass (winter)	Jerusalem artichoke tubers
Tree Lucerne (*Cytisus proliferus*)	Pieces of bread

Tree-kangaroos at Healvesville will sometimes eat the tips of eucalypt branches and saplings put on display but do not particularly favour these (George, 1982).

Taronga Zoo, Sydney (Australia)

The Goodfellow's Tree-kangaroo at Taronga Zoo is fed a variety of fruit and vegetables as well as macropod pellets.

Preferred pieces include corn, sweet potato, banana, broccoli and avocado. However, these items are used in conditioning sessions. Vegetables and leafy greens are offered for main meals. A list of browse species can be found in Table 6.6. These are given out twice a day.

Table 6.6. List of browse offered to *D. goodfellowi* at Taronga Zoo

Ash	Lucerne
Elm	Poplar
Prunus	Willow
Apple	*Ficus* species
Coprosma	Hibiscus
Sparmagnia	Ginger Lilly
Lilly Pilly	*Potostrum* (with new foliage)

6.2 Supplements

There are seven macro and nine trace minerals that are considered dietary essential for tree kangaroos. Macro minerals include calcium, phosphorus, sodium, chlorine, magnesium, potassium, and sulfur and trace elements, include iron, iodine, copper, molybdenum, zinc, manganese, cobalt, selenium and fluorine (Edwards & Ward, 2001).

In Papua New Guinea, Tree-kangaroos relished pieces of freshly dug clayey soil before the introduction of mineralised salt licks (George, 1982). Salt licks and mineral salt blocks can be given *ad libitum* as long as ample water is provided (Melbourne Zoo, George, 1982, Edwards & Ward, 2001).

The occurrence of white muscle disease (WMD) has been described in *Dendrolagus*, and includes symptoms such as stiff gait, muscle atrophy, weakness, and anorexia (Edwards & Ward, 2001).

As a result of these reports, there have been suggestions for the need to supplement tree kangaroo diets with vitamin E and selenium (Mullett et al. 1990; Whitehead, 1986, cited in Edwards & Ward, 2001, Mullet, Yoshimi, & Steenberg 1990).

To prevent vitamin/mineral toxicosis, especially in regard to the addition of selenium, it is more important to ensure that the animals eat the appropriate amount of nutritionally balanced feed (e.g., herbivore pellet, leafeater diet) in the daily ration. This eliminates the need for additional supplementation (Edwards & Ward, 2001).

George, 1982 also notes that regular quantities of fresh maize in the diets of *D. goodfellowi and D. matschiei* are necessary to maintain rich red and yellow coats colours.

6.3 Presentation of Food

The manner in which browse is presented is important for Tree-kangaroos and at Woodland Park Zoological Gardens, it was noted that different proportions of leaves were eaten depending on the way browse was presented.

Only 50% of browse offered was consumed when tossed on the ground in a pile. When “planted” in the sand, about 65-75% was eaten, compared to 90-100% consumption rate when the browse was stuck up in the branches of the trees.

Browse can be placed inside PVC pipes, secured to branches and filled with water to prolong the freshness of the leaves.

Animals inhabit the same exhibit, should be fed in their own pans at separate stations in the exhibit, with the feeding stations spaced from 1.5 to 3.6 meters (5 to 12 feet) apart to prevent food-related aggression, and to insure that each animal gets its own food ration (Mullet, Yoshimi, & Steenberg 1990).

The way in which food is presented to Tree-kangaroos varies between institutions. While the fruits and vegetables should be large enough to allow the animal to manipulate the particle, they should also vary enough in size to provide occupation for the animal. (Steenberg 1996, cited in Edwards & Ward, 2001).

Food pans should be placed in high pan holders, on feeding stations off the ground (approximately 4-5 feet) or secured to a horizontal platform. While trying to obtain favourite food items, Tree kangaroos will often toss specific items aside pushing pans onto the ground in the process. As fallen foods are rarely consumed by captive animals, feeding dishes should be secured to reduce the amount of food lost. If the feeder is outside it should be covered (Edwards & Ward, 2001)

7 Handling and Transport

7.1 Timing of Capture and Handling

Tree-kangaroos are crepuscular and have been reported as active during the day in the forests of Papua New Guinea, but in captivity, they were most active during early morning and late afternoon (George, 1982). This indicates that the best time for capture and handling in a captive situation would be in the evening, after park visitors have gone, to decrease stress on members of the public as well as the Tree-kangaroo.

Tree-kangaroos are most likely to have been given access to the night den in the evening, thus facilitating capture.

7.2 Catching Bags

Only strong, adequately sized Hessian (burlap) sacks or bag nets should be used to capture Tree-kangaroos. Strong materials are needed to protect the handler from injuries inflicted with strong forelimbs, kicking, sharp claws and biting (Holz, 2005).

Pillowslips are not adequate as they are too small and tear easily.

7.3 Capture and Restraint Techniques

As Tree-kangaroos are arboreal animals, it is important to ensure that the animal does not have access to tall climbing trees in the main exhibit/enclosure. It is best to attempt capture and restraint when the animal is relaxed inside the den/holding pen area (Taronga Zoo).

Manual restraint

Medium sized macropods can be caught in a net and once caught, can be grasped at the base of the tail and lowered into a Hessian (Burlap) sack. Animals in bags tend to relax as outside stimuli and visual threats are removed and the chance of injury is decreased (holz, 2005). It is important once any macropod is caught that its eyes are kept covered during inspection in order to minimise stress and reduce the animal's attempts to escape (Jackson, 2003).

It is important not to hold the bag against the handler's body while the animal is being transported. They can still kick, bite or scratch through the bag injuring the handler (Holz, 2005). Tree-kangaroos will bite if given the opportunity and have strong forearms and large claws which should be kept out of reach (George, 1982).

Chemical restraint

Inhalation anaesthesia, with isoflurane, is the technique of choice. If the animal weighs <10 kg, and can be manually restrained, the safest way to induce general anesthesia is via a non-rebreathing circuit (e.g., Ayre's T-piece) and a mask. If the animal weighs >10 kg, it should be maintained on a rebreathing system (e.g., Circle). For animals in bags, anesthesia is induced by extracting the macropod's head and placing the face in the mask to protected the operator to some extent from the powerful fore and hindlimbs as they are contained within the bag (Holz, 2005).

If the animal cannot be restrained to induce gaseous anesthesia, it will require an injectable induction in a major muscle mass. To induce general anesthesia Zoletil (Telazol) 10 mg/kg can be injected intra muscularly (IM). The advantage of Zoletil is its low volume and rapid effect, making it ideal for remote capture by dart (Holz, 2005).

Conditioning

A successful technique has been to apply the principles of positive reinforcement to condition Tree-kangaroos to be approached and manipulated by its keeper Animals have been conditioned to tolerate physical checking, to move into pet packs and transport crates and even to be hand injected while being distracted by favourite food items. (Taronga Zoo, Melbourne Zoo). If a bond is formed with the Tree-kangaroo, tail grabbing and darting are not necessary.

7.4 Weighing and Examination

The least stressful method of performing examinations and weighing is to condition the animal to stand on scales while consuming food reinforcements. Tree-kangaroos have also been conditioned to tolerate tactile manipulation by primary keepers, with the aid of food rewards (Melbourne Zoo, Taronga Zoo).

Tree-kangaroos can also be held by the base of the tail and lowered into a sack for closer examination. Getting the animal into a sack usually requires two people, one to lower the animal towards the sack and the other to get the sack over the head without catching the forepaws (George, 1982).

Pouch checking requires three people, one to restrain the back legs and tail, one to keep the sack wrapped around the animal's head and forelimbs and a third to examine the pouch (George, 1982).

Animals that are not accustomed to restrain may resist vigorously and become stressed, therefore it should only be used for short term procedures or as a prelude to chemical restraint (Holz, 2005).

7.5 Release

Many macropods have a tendency to hop off quickly and erratically (Jackson, 2003), however the Tree-kangaroo will naturally climb in order to distance itself from harm.

To avoid injury to the animal, especially following anaesthesia, it is better to release a Tree-kangaroo into a quiet and dark holding pen with a lower platform for climbing, but not high enough to cause injury should the effects of any anaesthetics still linger (Taronga Zoo).

7.6 Transport Requirements

.

- Animals to be exported must be physically examined by a veterinary surgeon experienced in the care and treatment of macropods, fourteen to twenty one days prior to the date of export
- If being transported by vehicle or when transferring from the airport, a keeper or veterinarian should accompany the animal
- Animals must not be handled or removed from their containers during transit, unless considered essential by a keeper or veterinarian.
- Macropods must not be subjected to temperatures more than 30°C or lower than 10°C during the transfer
- Noise, and time from crating to destination, must be kept to a minimum.

- All necessary documents should accompany the animal being transferred
- Containers should have clearly visible labels stating direction to be held and nature of the cargo (i.e. Live Animals sticker)

(IATA, 1999, DEH, 2003)

7.6.1 Box Design

Shipping containers will be constructed from wood, plywood, hardboard or fibreboard with dimensions to allow the Tree-kangaroo to stand fully erect, to turn around and lie down comfortably (IATA, 1999 page 297).

If the total weight of the container plus animal exceeds 60 kg (132 lb) then metal reinforcement of the whole container must be carried out (IATA, 1999). An example of box design can be seen in figure 2.

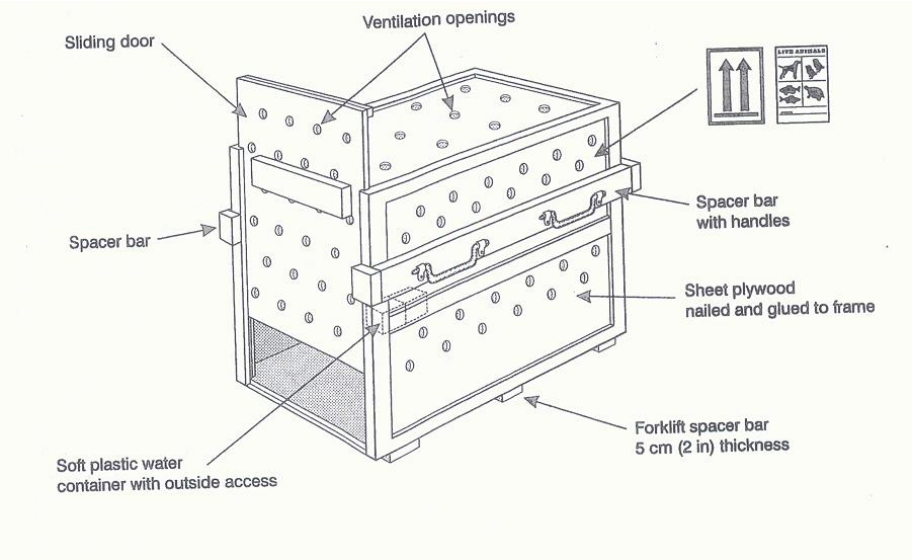

Figure 2. Transport box design for *Dendrolagus spp.*

The following requirements are adapted from IATA Live Animals Regulations, 1999, with respect to:

Sides

The sides, top, bottom and door of the container must be made of 1cm plywood or similar. Parts can be screwed or nailed and glued with non-toxic glue to the frame.

A sliding door of 0.6 cm in wood or plywood must be provided at one end of the container. It must be fastened with screws after loading so that it cannot be opened accidentally. Alternatively, the top of the container can be used as the access. In this case, the panel must be screwed to the frame and not nailed and glued.

Spacer bars to a depth of 5 cm with handles must be added to the sides of the container as shown in figure 2. This aids in manual handling and lifting of the container.

Floor

The floor must be solid and covered with a minimum of 2.5 cm of absorbent material, such as wood shavings or wood wool packing for bedding and placed over a layer of newspaper.

Roof

The ventilated plywood roof must be padded with a soft, non-destructible material in case the animal becomes agitated and jumps. The container must have ventilation openings over its entire surface.

Ventilation

Ventilation must be provided by openings with a minimum diameter of 2.5 cm spread over the four sides and the top. The lower openings must be at least above the absorbent bedding to prevent spillage.

7.6.2 Furnishings

Because Tree-kangaroos are an arboreal species, it is recommended that slanting branch-like bars are fixed to one side of the container (IATA, 1999).

7.6.3 Water and Food

Animals do not normally require additional feeding and watering during 24 hours following the time of dispatch, but if feeding is required due to an unforeseen delay, food and water must be provided. Care must also be taken not to overfeed. A soft plastic water container must be provided, raised off the floor and with outside access. (IATA, 1999)

7.6.4 Animals per Box

Under no circumstances may more than one animal be transported inside the same compartment (IATA, 1999, Jackson, 2003). Females with pouch young should never be transferred unless recently born and still attached to the teat (Jackson, 2003).

7.6.5 Timing of Transportation

To prevent overheating, macropods should be transported overnight if on a long journey or early morning or evening for shorter trips (Jackson, 2003).

7.6.6 Release from Box

The best method of release is to open the box while inside the holding pen and slowly remove the sliding door panel, and exit the enclosure from behind the box immediately. This allows the animal to adjust to the new surroundings and leave the box when it is ready. The box can then be removed in the next day or two once the animal has settled into the new enclosure and calm down (Jackson, 2003).

8 Health Requirements

8.1 Daily Health Checks

The animal should be observed daily for any signs of injury or illness. This can be done when the enclosure is being cleaned or when the animal is being fed.
Keepers will first need to know the normal behaviours of the animal before deviations from the norm can be recognised.

Animals can be conditioned to station on a platform for daily check-ups and rewarded with favourite food items.

During check-ups, the following should be noted:

- Coat condition
- Fur on enclosure floor (suggesting fighting or mating)
- Appetite
- Discharges from the ears, eyes, nose, mouth and cloaca
- Faeces (amount and consistency)
- Cloaca and rump (for wetness)
- Nose (wrinkles may indicate dehydration)
- Changes in demeanor
- Injuries (including swelling around the face, lameness, reluctance to move, or stiffness
- Pouch young
- Semen plugs (suggesting mating)

(Jackson, 2003)

8.2 Detailed Physical Examination

If a more thorough examination of the species is required, chemical restraint may be necessary to assess body condition, heart and respiratory rate, eyes, cloaca, pouch, and internal genitalia.

8.2.1 Chemical Restraint

Sedation of macropods is usually undertaken with diazepam at a dose rate of 0.5-2.0 mg per kg, intramuscularly in the thigh muscle. The dose depends on the temperament of the animal.

If a more rapid response is required, diazepam can be injected intravenously at a dose rate of 0.1-1.0 mg per kg in the coccygeal vein near the base of the tail or the cephalic or medial saphenous veins. Sedation in macropods is important as it helps to reduce stress and prevent myopathy.

Tiletamine/zolazepam at a rate of 5-15 mg per kg intramuscularly, is the injectable drug of choice for anaesthesia and can be given by hand or by dart, but results in slow recovery time (1-5 hours).

Inhalation anaesthesia using either isoflurane or halothane in oxygen is commonly used in macropods.

(Jackson, 2003)

8.2.2 Physical Examination

Body condition	This can be assessed by muscle palpation in the area over the scapula spine and temporal fossa or by feeling the base of the tail. Observing the muscle mass between the hips is also a quick condition indicator.
Temperature	Normal range is 35-36.5^{o}C and can be taken through the rectum via the cloaca
Weight	Body weight is generally a good indicator of the animal's state of health. Body weights can be recorded and compared to previous results.
Pulse rate	In macropods varies depending on body size, 60-150 beats per minute, decreases with increasing body size.
Respiratory rate	Normally between 10-30 breathes per minute, with rate decreasing with increasing body size.
Fur	Check for alopecia, ectoparasites, fungal infections and trauma
Eyes	Should be clear, bright and alert with normal bilateral papillary light response, normal corneal reflex, and should not have discharges
Cloaca	Should be clean and clear of faeces
Pouch	Check for pouch condition and presence of pouched young. Longer teats indicate that there is young at foot, especially if milk can be expressed from teat. If young present, record the sex, stage of development, weight if no longer attached. If growth curves are available, determine the age of young.
Males	Check the size of testes (dimensions) and consistency (squishy or firm). The penis can also be extruded and assessed.

(Jackson, 2003)

8.3 Routine Treatments

Worming of Tree-kangaroos is not necessary on a regular basis. Faecal samples can be analysed on a 6-monthly cycle and worming treatments administered accordingly.

If lesions, fur loss or skin abnormalities are detected during daily health checks, then further examination can be performed to identify any problems/ectoparasites and treated as needed.

(Veterinary Quarantine Centre and Life Sciences Policy, Taronga Zoo)

8.4 Known Health Problems

Tree-kangaroos are host to a number of ecto and endo parasites as well as pathogens. Most of the parasitic infestations experienced by Tree-kangaroos appear to be relatively benign. Some endoparasites are serious nuisances whereas others, particularly those which live in the intestinal tract, live in symbiotic relationship with their host (Martin, 2005).

<u>Bacterial diseases</u>

Melioidosis

Cause - *Burkholderia pseudomallei* is a zoonotic bacterium that causes abscesses in the internal organs such as the lungs, liver and spleen in a disease syndrome known as meliodosis. Meliodosis is common throughout the tropical regions and is soil borne. With the most dangerous time for transmission during the wet season when the temperatures are high and soil is saturated. It is very common among Tree-kangaroos housed in enclosures with dirt floors (Flanner *et. al*, 1996).

Signs – weight loss, polyarthritis, nervous symptoms and cough. Abscesses found on the liver, lungs and spleen of tree-kangaroos after death.

Treatment – Active infections can be treated with antibiotics (Melioidosis Fact Sheet)

Prevention – Captive Tree-kangaroos should be kept in an environment where the humidity and moisture levels can be controlled. During the wet season or during periods of heavy rain, Tee-kangaroos can be kept off exhibit until soil moisture levels are safe.

(Martin, 2005)

Mycobacterial disease

Mycobacterial disease has caused deaths of captive Tree-kangaroos in American zoos (Martin, 2005), with avian strains mycobacteria (avian tuberculosis) most widely reported (Flannery et. al, 1996).

Cause – The agents are 'atypical' Myobacterium species that are usually transmitted by birds via infected faeces.

Signs – Presence of lesions or in apparently healthy animals, bacteria can be identified in swabs.

Treatment – Sick animals have been successfully treated with a three-drug regimen (Flannery et. al, 1996), seek veterinary advice.

Prevention – Ensure food is stored where it cannot be contaminated by bird faeces. Adopt a pest control strategy that minimises or eliminates birds from the enclosure, feeding stations and water troughs.

(Martin, 2005)

Exudative dermatitis

Cause – Dermatophilus congolensis bacteria from prolonged wetting, high humidity, high temperatures and ectoparasites.

Signs – Focal cutaneous exudation, leading to fur matting and scabbing.

Treatment – This disease is self-limiting and most animals heal within 3 weeks, but if the condition becomes severe or persists or if the animals is immunocompromised, seek veterinary treatment.

Prevention – Isolate infected animals to prevent further spread. Control ectoparasites by using insecticidal washes. (Spielman,)

Necrobacillosis ("lumpy jaw")

Cause – High levels of causative non-sporing anaerobic bacteria (*Fusobacterium necrophorum*), overcrowding, poor hygiene, trauma, stress, poor diet (soft food, low vitamin A).

Signs – swelling around the jaws, lips, tongue or neck associated with necrotic, fetid erosive lesions, nasal discharge and septicaemia. Excessive salivation, weight loss, poor coat condition, laboured breathing (dyspnoea) are also key signs.

The tissue damage can be far more extensive than the external signs indicate. The disease can also affect the oesophagus, stomach (gastroenteritis), liver and lungs (pneumonia) and various bones.

Treatment – In early cases where only the incisors are affected, antibiotic therapy or radial surgical treatment may be prescribed. Drug combinations including amoxyallin and clavulinic acid, gentamicin and metronidazole, are given by injection rather than orally due to the potential of these drugs to kill the essential bacteria needed to ferment food in the gut.

Prevention – Adopt good husbandry practices by removing faeces daily, not overcrowding an exhibit, provide raised feeding stations, green leafy branches, washing utensils and dishes properly). Mature eucalypt branches with bark can aid with a clean eruption of molar teeth.

Any animal showing signs of the disease should be removed from the enclosure and quarantined. Affected areas should be left in sun for 4 weeks.

(Spielman, 1994, Jackson, 2003)

Protozoal diseases

Toxoplasmosis

Cause – Oocytes (eggs) of *Toxoplasma gondii* are shed in cat faeces can encyst in the muscles.

Signs – Vary depending on the organs affected, but usually include signs of pulmonary and neurological pathology, respiratory depression, or sudden death. If signs are exhibited they include lethargy, depression, inappetence, respiratory distress, convulsions, diarrhoea, staggering, incoordination, circling and apparent blindness (Jackson, 2003)

Treatment – There are no effective treatments for marsupials once signs are evident and the disease is inevitably fatal. Those that are still alive should generally be euthanased (Jackson, 2003).

Prevention – Ensure cats do not have access to areas where Tree-kangaroos are housed or where their food is kept. Adopt correct hygiene practices.

(Spielman, 1994, Martin, 2005, Jackson, 2003)

Fungal diseases

Candidiasis (“Thrush”)

Cause – Candida albicans (yeast), poor hygiene practices, stress, immunoincompetence, improper antibiotic use, sudden dietry changes, oral trauma. Condition is common in hand-reared animals.

Signs – Curd-like encrustations in the mouth and pharynx and grey-white denuded areas, dysphagis (difficulty eating and swallowing), anorexia, diarrhoea, foul yeast-like odour from the mouth, faeces and cloaca. Severe cases include oesophageal and gastric legions

Treatment – Antifungals are usually very effective: seek veterinary advice.

Prevention – Correct hygiene and correct antibiotic use.

Dermatomycosis (fungal skin infections)

Cause – Several species of fungus and stress.

Signs – Oval to rounded areas of alopecia (hair loss), especially on the limbs and tail.

Treatment – This disease is often self-limiting if husbandry practices are good. Treatment includes topical antifungal agents such as Conofite cream, iovone washes, halamid washes, or systemic antifungals ketaconazole 10mg/kg for 14 days (Jackson, 2003).

Prevention – Isolate affected animals from other juveniles until condition has improved. Wear protective clothing when handling affected animals and avoid handling if unnecessary.

(Spielman, 1994)

Viruses

Encephalomyocarditis Virus (EMCV)

Cause – The virus is a rodent borne virus, generally spread in their faeces. It can also infect Tree-kangaroos if they consume foods that have been contaminated by rodent faeces.

Signs – Generally results in sudden death.

Treatment – As the first indication of the virus is usually sudden death, there is little that can be done to treat it.

Prevention – Prevent contamination of food by rodent faeces and minimise rodent access to feed trays. Rodent baits can be placed around the enclosure to control infestations. A vaccine has been developed that can be used.

(Jackson, 2003, Spielman1994)

Herpes Virus

Cause –There is more than one virus that can cause the disease and there is a high mortality rate once the animal is infected.

Signs – Conjuctivitis with pyrexia (fever) and respiratory distress, uncoordination and death. Mouth ulcers, clocal ulcers and vesicles may also be present.

Treatment – Effective treatment has not been identified to date. Any treatment is supportive only.

Prevention – This is difficult as the virus is widespread in macropods. Practice good husbandry techniques and minimise stress on the animal.

(Jackson, 2003)

Endoparasites

Roundworms and flat worms

Most parasites from the gut of Tree-kangaroos are nematodes (roundworms), most of which are strongyloides. Some feed on the stomach contents of Tree-kangaroos, while others, such as *Macropostrongyloides*, attach to the stomach wall and feed on the blood of their hosts (Martin, 2005).

The genus of nematodes, *Cloacina*, is especially well represented in Tree-kangaroos. These parasites, however have formed a symbiotic relationship with their host, while robbing them of some nutrients, also excrete energy rich compounds such as lactate, propionate, acetate and succinate. (Martin, 2005).

Because Tree-kangaroos only come to the ground to move to other feed trees, they have limited opportunities to for re-infection and may be the main reason why they carry such light loads of nematodes compared to other macropods.

Goodfellow's Tree-kangaroos are also affected by Cestodes (tapeworms) *Progamotaenia dendrolagi.* Tapeworms from the *Progamotaenia* genus are transmitted through the intermediate host, oribatid mites, which are mainly found in soil and pasture. (Martin, 2005)

Heavy parasite loads can be treated with broad spectrum antihelminthics under veterinary advice.

Infestations can be prevention by regularly checking faecal samples, instigating a worming program and regular cleaning and removal of faeces from the enclosure. Providing clean drinking water is also beneficial. (Spielman, 1994)

Ectoparasites

Like other arboreal marsupials, Tree-kangaroos carry a relatively light load of ectoparasites. Their most frequent ectoparasites are lice of the family Boopiidae, in particular *Heterodoxus pygidialis*. These are minute, flightless insects with chewing/biting or sucking mouthparts, and spend their entire life on the skin of a single host.

Ectoparasites can be controlled with malathion, pyrethrin baths and ivermectin.

(Spielman, 1994)

Nutritional diseases

Periodontal Disease

Cause – soft food in the diet

Signs – Gum retraction and bleeding, tartar build-up, excessive salivation, tooth loss

Treatment/prevention – Incorporate more natural food, high in fibre, in the diet (eucalyptus branches)

(Spielman, 1994)

Vitamin E deficiency

Cause – Hypovitaminosis E, lack of exercise (small enclosure)

Signs – Paralysis and atrophy (wasting) of hind limb muscles.

Treatment/prevention – Vitamin E supplementation and exercise.

(Spielman, 1994)

Miscellaneous Diseases

Capture Myopathy

Cause – Unusual exertion, anxiety, diet low in vitamin E or selenium. Macropods are very susceptible. It is characterised by the degeneration and necrosis of skeletal and cardiac muscles and results in muscle damage following excessive chasing prior to capture.

Signs – Increased respiratory and heart rates, muscle stiffness, floppy neck, weakness, sudden death, muscle pigment in urine (myoglobinurea), convulsions, twisted neck (torticollis), extreme arching of the back and neck (opisthotonus).

Treatment – Usually ineffective but is generally supportive and includes intravenous sodium bicarbonate to counteract acidosis of muscle cells. Diazepam is useful to control anxiety and relax the muscles.

Prevention – Minimise stress by planning captures, utilising trained personnel and using appropriate catching aids. If necessary, administer sedatives (seek veterinary advice) prior to or immediately after stress.

(Spielman, 1994, , Jackson, 2003)

Zoonoses

Salmonellosis
Cause – Salmonella spp., poor hygiene, stress, overcrowding.

Signs – Sudden death, diarrhoea ranging from unformed faeces to black tarry faces, weakness, lethargy, poor appetite, pneumonia

Treatment – Immediately seek veterinary advice as this disease is serious and potentially fatal.

(Spielman, 1994,)

Dermatomycoses ("ringworm")

This can be severe and highly contagious in humans. Humans affected will develop oval to round areas of redness (erythema), scaliness or itchiness.

Seek medical advice and prevent infection by wearing protective clothing, gloves and boots when in contact with an animals known to have the disease.

(Spielman, 1994,)

Hydatid Disease

Cause – Echinococcus granulosus cestode (tapeworm)

Signs – Cysts develop on the internal organs (liver, stomach, lungs, brain)

Treatment – Administer worming treatment as prescribed by a veterinarian.

Prevention – Instigate a worming program for captive animals as well as staff in contact with them.

(Spielman, 1994,)

8.5 Quarantine Requirements

Any marsupial coming from other parts of Australia are required to remain in quarantine for more than 21 days. If coming from overseas, the quarantine period increases to about 30 days.

During the quarantine period, faecal samples are obtained and tested once a week for 3 weeks. Two clean samples are needed before the animal can be cleared of suspected parasitic infestations bacteria, yeasts (slides and cultures are prepared to analyse blood and any organisms present).

A detailed physical exam is also performed on the animal. The body is checked for lesions, injuries etc. If lesions are present, skin scrapes will also be analysed to detect any ectoparasites.

Within the quarantine period, the Tree-kangaroo is also weaned off the diet given at other institutions, such as “leaf-eater” cube and given macropod cubes, fruit and vegetables, cheese and eggs.

While in quarantine, it is important that the animal is not housed near other marsupials. Vercon disinfectant is used on all areas and equipment. Tables are set up in the quarantine room to act as elevated platforms while some natural branches can be supplied to encourage climbing and locomotion.

As concrete floors can injure and abrade the soft padding on the Tree-kangaroo’s feet, rubber matting can be laid down first to prevent this and hosed down/disinfected as needed. Gumboots should always be worn when servicing quarantine dens.

To prevent the spread of any diseases to other animals and staff, footbaths are placed at the entrance and exit of all quarantine areas and dens. If any blood tests /cultures produce a positive result, full barrier husbandry should be implemented.
(Veterinary Quarantine Centre and Life Sciences Policy, Taronga Zoo)

9 Behaviour

9.1 Activity

Most species of tree-kangaroo are described as rather inactive. In other *Dendrolagus* species, less than 10 per cent of activity during the day consisted of grooming, feeding, moving, or socialising (Flannery *et al*. 1996). This however helps to conserve energy, an important adaptation for species that must survive on leaves which have a low nutrient value (Flannery *et al*. 1996).

Tree-kangaroos are crepuscular. Nocturnal inspection s of captive Tree-kangaroos revealed that most are sleeping or resting on sleeping shelves (George, 1982). In captivity and in undisturbed forest, *D. goodfellowi buergersi* is most active in the morning and afternoon (Flannery *et al*. 1996). They do not have the large eyes of other nocturnal mammals inhabiting New Guinea, such as the Dorcopsis Wallaby (George, 1982).

9.2 Social Behaviour

Tree-kangaroos are generally solitary and occur in small groups in the wild (George, 1982, Jackson, 2003). Males are polygynous and territorial with home ranges that overlap with several females. In Papua New Guinea, one male was housed with two or three females (George, 11982).

Adult males are extremely intolerant of each other, but males will tolerate their own male offspring for some time (George, 1982). Home ranges overlapping with other males result in antagonistic encounters at the boundaries (Newell, 1999, cited in Jackson, 2003). Agonistic behaviour between males involves jumping onto the back of the opponent, biting his back, ears and tail.

In captivity, mothers and daughters form coalitions to support each other against males (Ganglosser, 1984, cited in Jackson, 2003).

In *D. goodfellowi buergersi*, male, female and pouch young have been caught together, indicating that this species form mating pairs. Native hunters of Papua New Guinea have reported that this species is often found in male-female pairs (Flannery *et al*. 1996), which is unusual among *Dendrolagus* (Flannery, 1995).

9.3 Reproductive Behaviour

Like other macropods, Tree-kangaroo males will follow the female and investigate her cloaca (Jackson, 2003). Flehmen has been observed in Goodfellow's Tree-kangaroo, where the male inserts his snout into the urine stream of the female (Flannery, 1995) to determine if she is oestrus or receptive to mating.

In Goodfellow's Tree-kangaroo, copulation takes place on the ground and lasts up to 60 minutes (Flannery *et al*., 1996). Mating takes place when the female remains stationary and crouches with the male coming up behind (Jackson, 2003). The female supports her weight on her forepaws and the male clasps her with his forelimbs around her thorax in the typical macropod fashion (Martin, 2005).

Unlike the rough neck-bites given by other Tree-kangaroo species, male *D. goodfellowi buergersi* nibbles the female's neck during copulation. The male dribbles during intercourse, leaving saliva on his snout and the back of the female (Flannery *et al*. 1996).

In Tree-kangaroos, a hardened semen plug is left near the opening of the female genital tract, possibly to prevent other males from copulating with her. In a counter-strategy, females are sometimes known to remove the plug with their teeth or paws (Flannery *et al*. 1996).

9.4 Bathing

Macropods, in general do not bathe (Jackson, 2003). While shallow swimming pools can be provided for enrichment purposes, the depth of the water should not be more than a few inches. Tree-kangaroos can and have drowned in water moats. Special care must be taken when joeys are present (A.S.Z.K, 2003).

9.5 Behavioural Problems

Wild caught Goodfellow's Tree-kangaroo in Papua New Guinea took longer than other species to settle down in captivity. Captive breeding did not occur until 2 years after the first stock was acquired (George, 1982).

Males cannot be housed together and will fight if sharing the same territory while dominant females Tree-kangaroos have been observed chasing other females in the same enclosure, biting their tails (George, 1982).

At Taronga Zoo, the male Goodfellow's Tree-kangaroo has been described as calm but will become skittish when placed in a new exhibit and also in response to loud and unusual noises, where he and retreat to the highest point in the enclosure. The animal's trust has to be regained by keepers involved (Melbourne Zoo, Pers. Comm., 2007).

Care must be taken when housing other species with Tree-kangaroos as they have been known to hunt, injure or kill various species of birds and reptiles and other macropods (see 9.10 for more details).

9.6 Signs of Stress

Signs of stress in macropods include:

- Vocalisation
- Flinching
- Escape attempts
- Thumping the ground with hind feet
- Body trembling
- Head shaking
- Ear flicking
- Teeth grinding
- Licking of forearms, shoulders and flanks
- Reduced food intake
- Diarrhoea

Female Tree-kangaroos "tongue-click" to indicate that she is anxious about young that has wandered too far away and tail swishing from side to side has been observed as a warning signal when a dog has approached an enclosure (George, 1982).

9.7 Behavioural Enrichment

The following information was obtained from the A.S.Z.K (2003) publication on Tree-kangaroo enrichment. Any enrichment program and/or items used must first be approved by the institution where the animal is being housed and monitored on a regular basis.

Item	Description/information
Boxes	Non-wax coated, staples and tape removed, monitor for ingestion
Grain bags	Paper and burlap, monitor for ingestion
Cardboard tubes	Monitor for ingestion
Kong toys	Available at pet shops
Browse*	Local, non-toxic, species approved by Veterinary department
Swimming pools	With a few inches of water and leaves, straw, bark, wood chips
Crates	Also useful for crate training
Platforms	Non-skid surface
Boomer balls	Assorted sizes
Scents	Spices, extracts, perfumes (monitor and adjust for response) – some scents (musk) seem to cause a fear and flight response
Hanging canvas bags	Stuffed with straw
Cargo nets	Monitor for ease of movement
Rope ladders	Monitor for ease of movement
Plastic barrels	5 gallon pails and large 20 gallon plastic drums with ends and wire handles removed
Stumps	Non-toxic species
Misters	Can be used for cooling in hot weather, however animals should not be directly sprayed
CD/Tape/Radio	For playing natural sounds or a different background sound to stimulate the animal
Grapevine	Can be hung and incorporated into other enrichment
Ferret logs	Can be stuffed with shredded paper or straw and treats. Inside can also be smeared with peanut butter
Frozen treats	With any approved food item
Christmas trees	Approved by veterinarian and non-treated
Sod and/or seed grown grass	Chemical free. Watch for netting in commercial sod
Sprouts	Check for freshness – can mould quickly if too warm

*Please refer to appendix E for an approved list of browse species for Tree-kangaroo by Taronga Zoo (A.S.Z.K, 2003).

9.8 Introductions and Removals

Unlike many male macropods who are tolerant of each other, Tree-kangaroos are quite aggressive and it has been described how fierce other *Dendrolagus* species (*D. bennettinanus*) can be towards one another, "If two are put into one enclosure, they will fight until one is killed" (Martin, 2005, page 116-117).

For this reason, it has been suggested that males be only ever introduced to groups of two or three females (George, 1982). Even though Goodfellow's Tree-kangaroo only have a faint scent when compared to other members of the Genus (Flannery *et al*., 1996), odour no doubt plays an important role within a group as it allows animals to communicate.

When introducing two animals for the first time, it should be done in the morning when members of the public are not present to witness any potentially aggressive/violent behaviour. Introducing animals in the morning also allows for a longer period of time for animals to be supervised/observed (T. Britt-Lewis, Pers. Comm.). Introductions may also be done off exhibit where keepers can keep a close watch.

At Taronga Zoo, Sydney, one female *D. goodfellowi* was introduced to the male in August 2007. The Tree-kangaroos share the same exhibit during the day but are housed in separate night dens to allow the animals to become familiar with one another and minimise stress.

Tree-kangaroos are generally solitary (Jackson, 2003, Martin, 2005, Flannery *et al*., 1996) and can therefore be housed alone if removals are necessary.

9.9 Intraspecific Compatibility

In general, Tree-kangaroos are solitary and territorial; however, Goodfellow's Tree-kangaroo have been known to occur in male-female pairs with young (Flannery *et al*., 1996, Flannery, 1995). Tree-kangaroos have been classified as "Type 1 – solitary, except during reproduction" and the suggested sex ratio for *Dendrolagus* is 1:1-2 (Jackson, 2003).

Male Tree-kangaroos are very aggressive towards one another and must never be housed in the same enclosure or close together, but males will tolerate their own male offspring for a while (George, 1982).

In Baiyer River, Papua New Guinea, captive animals from one breeding group broke through the wire netting of an adjoining breeding group and mauled their young during the night. Within the same breeding group, dominant females have been observed chasing and biting the tails of others (George, 1982).

Adequate space, food and shelter are essential in a captive situation to reduce stress and discourage aggressive behaviour between animals.

9.10 Interspecific Compatibility

Matschies and Doria's Tree-kangaroos have been observed attacking Dorcopsis wallabies (that were housed in the same enclosure, causing injury in some cases.

Tree-kangaroos have also successfully killed various birds, including Nicobar pigeons (*Caloenas nicobaria*) (which was also eaten), swamp hens (*Porphyrio porphyrio*), Cape Barren geese (*Cereopsis novaehollandiae*), kookaburras (*Dacelo novaguineae*), Bourke's parrots (*Neophema bourkii*), grey goshawks (*Accipiter novaehollandiae*), Gouldian finches (*Erythrura gouldiae*) and Edward's lories (*Trichoglossus haematodus edwardsi*) (Jackson, 2003).

Tree-kangaroos have also attacked water dragons (*Physignathus sp*.) and long-nosed potoroos (*Potorous tridactylus*) (Jackson, 2003).

There are other reports of active carnivory by captive Tree-kangaroos. In Queensland, an adult Lumholtz Tree-kangaroo was seen eating a freshly killed 1.2m Carpet python (Morelia spilota). Hatchling Australian Bush Turkeys that have wandered into Tree-kangaroo enclosures have been caught and brains eaten (Martin, 2005).

In captivity, Goodfellow's Tree-kangaroo are known to eat chickens, devouring them head first (Flannery, 1995).

It has been recommended that Tree-kangaroos not be housed with avian species because of the danger of avian tuberculosis (Bush and Montali, cited in Jackson, 2003).

9.11 Suitability to Captivity

Tree-kangaroos have been popular as zoo exhibits for many years because of their colouful pelage and unusual adaptations Goodfellow's Tree-kangaroo has been successfully kept and bred in captivity. (George, 1982).

There are currently about 34 Goodfellow's Tree-kangaroos outside of Papua New Guinea; 13 in North America, 13 in Europe and 14 in Australia. The species has been displayed at Currumbin Wildlife Sanctuary, Queensland, for more than 20 years (Currumbin Wildlife Sanctuary, 2007).

With proper management techniques, diets and enclosure design, the species can be successfully kept in captivity. At Baiyer River Sanctuary, Papua New Guinea, four species of Tree-kangaroo were maintained between 1968-1975, totaling 66 animals (George, 1982).

Goodfellow's Tree-kangaroo kept in Melbourne Zoo and Taronga Zoo, Sydney, have been conditioned to accept contact by keepers for purposes of veterinary checks and PR. The species has also responded positively to conditioning with food rewards (Melbourne Zoo, Pers. Comm, 2007), becoming quickly accustomed to keepers entering the enclosure for servicing.

10 Breeding

10.1 Mating System

Most macropods are polygynous, (Jackson, 2003) with one male to every two or three females. Because of the aggressiveness of males to one another, they are kept separate (George, 1982).

After mating however, males should be removed from the female as they tend to fight, causing the female to lose her joey (Jackson, 2003).

10.2 Ease of Breeding

Some institutions have readily bred tree-kangaroos, while others have found it difficult. The key limiting factor lies in the availability of several of each sex to swap around (Jackson, 2003).

Goodfellow's Tree-kangaroos have been successfully kept and bred in captivity. According to the International Zoo Yearbook census, fourteen zoos were maintaining a total of 58 specimens in 1979 (George, 1982).

There are currently 34 Goodfellow's Tree-kangaroos found in captivity outside of Papua New Guinea, 13 in North America, 13 in Europe and 14 in Australia (Currumbin Wildlife Sanctuary)

10.3 Reproductive Condition

10.3.1 Females

Macropods can be placed in several categories depending on their reproductive status. These include:

Non-parous	Females have never bred, pouch is small with no skin folds, clean and dry, teats small
Parous	Females that have bred previously, pouch small, but distinct, dry and dirty, teats slightly elongated
Pregnant	Pouch pink and glandular in appearance, skin folds present on lateral margins of pouch
Pouch young	Pouch young present and attached to a teat
Lactating	Young absent from pouch but still suckling, pouch area large, skin folds flaccid, hair sparse and stained , skin smooth and dark pink, teats elongated,
Post lactation	Teats expressing only clear liquid and/or regressing

In other Tree-kangaroos, the male will check the females on a daily basis to for signs of oestrous. During this process, the female's pouch and cloaca is smelled. Occasionally, the urine is tasted and smelled (Flannery *et al*., 1996).

Once the female has mated, a semen plug (hardened semen) will be visible around the cloaca and should be noted by the keeper (Flannery *et al*., 1996).

10.3.2 Males

In other marsupials, the testes size increases during the breeding season (Jackson, 2003), but as Goodfellow's Tree-kangaroo are not seasonal breeders, it may be more difficult to monitor an increase in testes volume.

As mentioned above, the behaviour of male Tree-kangaroos will change as he will actively seek out the female, sniffing her cloaca and urine. The male will also chase and scuffle with the female until she descends to the ground to initiate courtship (Flannery *et al*. 1996).

10.4 Techniques Used to Control Breeding

Several techniques can be used to control breeding including:

- Separation of the sexes
- Vasectomy of the breeding male
- Castration of all breeding age males
- Removal of pouch young
- Immunocontraception
- Tubal ligation in females
- Culling

(Jackson, 2003).

10.5 Occurrence of Hybrids

Because of the arboreal nature of Tree-kangaroos, the likelihood of breeding occurring with terrestrial macropods is very unlikely. In its natural habitat, Goodfellow's Tree-kangaroo are found only in the isolated mid-montane zones of Papua New Guinea (Flannery, 1995).

10.6 Timing of Breeding

Captive studies of Tree-kangaroos suggest that they breed continuously with mating occurring at night (Flannery et al., 1996). Being in captivity ameliorates the harsh reality of living in the wild, food is always available, and captive animals seldom experience seasonal shortages (Martin, 2005).

10.7 Age at First Breeding and Last Breeding

Sexual maturity is reached at 2 years of age (Zoological Parks and Gardens Board of Victoria, 2004). In a female Matschie's Tree-kangaroo, breeding occurred until the age of 14 years (Martin, 2005). The maximum number of young in Matschie's Tree-kangaroo is about 10 – 12 and in the Grizzled Tree-kangaroo (D. inustus) 10 – 15 (Flannery *et al*. 1996).

10.8 Ability to Breed Every Year

There is no defined breeding season in Goodfellow's Tree-kangaroo (Zoological Parks and Gardens Board of Victoria, 2004). One factor influencing the reproductive success in Tree-kangaroos is the removal of progeny from parental groups. Breeding is also stimulated by a change to a new enclosure (George, 1982)

10.9 Ability to Breed More than Once Per Year

In adult Matschie's Tree-kangaroos, females are capable of producing young at 12 month intervals (Martin, 2005). Female Tree-kangaroos are classified as 'K' reproductive strategists. Because they naturally live in a complex and dangerous environment, they spend a relatively long time, nurturing and educating their young to ensure a high survival rate. A reduced birth interval and higher fecundity would not be an advantage to the species (Martin, 2005).

It is still not known conclusively whether or not embryonic diapause occurs in female Tree-kangaroos (Martin, 2005).

10.10 Nesting, Hollow or Other Requirements

Mating between Tree-kangaroos occurs on the ground. No nests, hollows or nest boxes are required. From the time of birth to weaning, the joey remains in the female's pouch. A Hessian sack can be used for bedding material to provide comfort (Taronga Zoo).

10.11 Breeding Diet

The energy requirements of tree kangaroos at stages of the life cycle other than maintenance (i.e., pregnancy, lactation, growth) have not been defined. Currently, many institutions offer 50% more of the nutritionally complete feeds in the daily ration when pouch young is present. This feeding strategy is continued until the joey is weaned. It is important to monitor the dam's weight during this lactation to prevent an inappropriate weight gain or loss (Edwards and Ward 2001).

10.12 Oestrous Cycle and Gestation Period

The oestrous cycle in *Dendrolagus* has been estimated at 54 days (Flannery et. al, 1996). The length of the oestrous cycle can be measured by faecal steroid analysis to determine the concentrations of the reproductive hormones, oestrogen and progestin in the faecal pellets from the females (Martin, 2005).

The gestation period of *Dendrolagus* is 44 - 45days, the longest recorded for any marsupial (Martin, 2005).

In Matschie's Tree-kangaroo, females will go into oestrous 7.3 days after losing a joey (Flannery et. al, 1996)

10.13 Litter Size

Data suggests that a single young is normal in Tree-kangaroos and breeding is aseasonal in New Guinea species (Flannery *et. al*, 1996, Zoological Parks and Gardens Board of Victoria, 2004). Twins have been known to occur in Finsch's Tree-kangaroo (*Dendrolagus inustus*) (Flannery *et. al*, 1996).

At San Diego Zoo, a *D. goodfellowi* joey, from a set of twins, was hand reared to weaning after being ejected from the mother's pouch after 35 weeks (Edwards & Ward 2001).

10.14 Age at Weaning

Once the joey is born and is in the mother's pouch, it will remain there for the next 10 months (Zoological Parks and Gardens Board of Victoria, 2004).

In Lumholtz's Tree-kangaroo, joeys associate with the dam for long periods of time. Young Lumholtz's Tree-kangaroos were seen suckling after 11 months of age and continued to do so for another month or two afterwards (Martin, 2005).

Prior to weaning or separation from parents, a joey should be fed in a separate food pan, near its dam (Edwards & Ward, 2001).

During the weaning process, microbial organisms need to establish in the gut of the joey to prevent loss of appetite, bloating, and even death. These organisms are typically transferred from the dam and her environment to the joey via coprophagy and grooming. Joeys may benefit from ingesting the dam's faeces to gain the essential gut flora required (Edwards & Ward, 2001).

10.15 Age of Removal from Parents

In Goodfellow's Tree-kangaroo, joeys will stay in the pouch for 8 – 10 months (Flannery *et. al*, 1996) and remain at foot for a further 2-3 months before becoming independent (Zoological Parks and Gardens Board of Victoria, 2004).

Young can be removed from the breeding group once they are independent and before they reach sexual maturity to prevent inbreeding or interference to the breeding group from overcrowding (George, 1982).

10.16 Growth and Development

Young macropods are typically identified and aged using physical measurements of specific anatomical features and body weights and then compared with charts for the species. An "age factor" value is used to identify the stage of development of a pouch joey in relation to these measurements.

The age factor is described as the ratio of the joey's age to the age of the species at full emergence from the pouch. For example, the age of a fully emerged joey is said to have an age factor of 1.00. Prior to this, the age factor is less than 1.00. (Edwards & Ward 2001).

If hand rearing a tree-kangaroo joey, the following measurements should be collected on a daily basis:

- Measure from crown to rump
- Foot – base of claw to heel
- Tail – underside base to tip
- Weight

These measurements can be tabulated and graphed as shown in Table 10.1and Figure 10.1.

Table 10.1: Physical measurements (mm) collected from a hand-reared male Goodfellow's tree kangaroo (*Dendrolagus goodfellowi*) at San Diego Zoo (Edwards & Ward 2001).

Days of Age	Crown-Rump measurements (mm)	Tail measurements (mm)	Hind foot measurements (mm)	Age factor
247	nd	305	60	0.90
253	205	325	62	0.93
260	215	325	62	0.95
267	235	335	65	0.98
274	260	350	68	1.00
281	260	350	70	1.03
288	260	350	72	1.05
295	270	355	78	1.08
302	nd	Nd	nd	1.10
309	nd	380	75	1.13
316	280	390	80	1.15
323	280	410	80	1.18
331	336	418	81	1.21
338	340	420	85	1.24

[1]age factor estimates are based upon an observation of full emergence of a single joey from a *D. goodfellowi's* tree kangaroo pouch at 273 days.

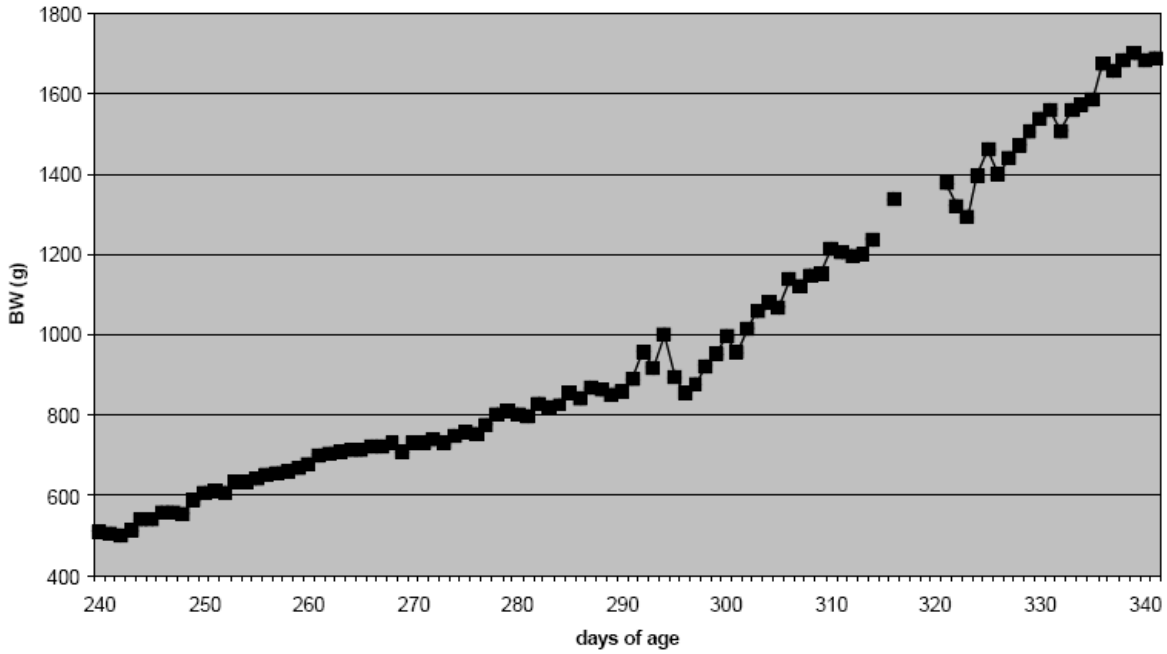

Figure 10.1: Growth of hand-reared male *D. goodfellowi* at San Diego Zoo (Edwards & Ward 2001).

11 Artificial Rearing of Mammals

11.1 Housing

With tree-kangaroos and many other macropods, minimising stress is a major consideration. Choosing suitable housing can help to create a stress free environment. Several factors should be considered:

- Securing the area from children and animals
- Maintaining the area in a hygienic manner
- Escape-proofing the area
- Clearing the area of obstacles and hazards
- Ensure the area offers shelter from the weather and storms

(Jackson, 2003)

Observations of Matschie's Tree-kangaroo (*D. matschiei*) have revealed that females that were housed with males do not reproduce well and mothers often lost their young. In a group of 3 females and one male there was a significant amount of aggression. Harassment also occurred between unrelated females when a male was present, and less so when the females were related. Only when the female was isolated did the abandonment of her offspring cease all together (Blessington and Steenberg, 2007, pg 94).

Pouch-gravid females should be left in their original enclosure to reduce stress and males removed before the birthing as they have been observed to interfere with the process (Blessington and Steenberg, 2007, pg 95).

Before being separated from the breeding partner prior to parturition, ensure the female is conditioned to eating on her own. On one occasion, a young female separated from her partner refused to eat and subsequently lost the joey she was carrying (Blessington and Steenberg, pg17).

11.2 Temperature Requirements

Joeys that have been separated from the dam are usually hypothermic and need to be warmed in a pouch with a heating unit set at 32°C – 34°C. Furless and furred joeys are best kept in an artificial pouch made from non-synthetic fibres such as cotton or flannelette that is placed in a woolen pouch. (Jackson, 2003).

As the joey grows fur, the temperature can be reduced to 28°C – 30°C. Correct temperatures can be maintained with the use of hot water bottles that are wrapped up in towels and monitored with a minimum/maximum temperature gauge with a plastic coated probe that can be placed next to the joey (Jackson, 2003).

The temperature of a tree-kangaroo enclosure should range between 18°C - 27°C and should not drop below 16oC. Tree-kangaroos can tolerate temperatures of 29°C provided that the humidity is not excessively high at the same time (Blessington and Steenberg, 2007, pg 18).

11.3 Diet and Feeding Routine

Macropod joeys have a marked intolerance to lactose and although it is known that changes occur in macropod milk composition throughout joey development, there is very little data on tree-kangaroo milk.

Parent-reared Tree-kangaroo joys will have the diet regulated by the mother, whose milk composition will change throughout lactation. Recent studies show that the female macropod milk will contain increased levels of sulfur-containing amino acids when the joey begins to grow fur. The concentration of carbohydrate will decrease towards late lactation and proteins remaining steady. Lipids show a marked increase in concentration towards late lactation and for hand-reared, canola oil has been used in the milk formula (Blessington and Steenberg, 2007, Jackson, 2003).

For hand-reared joeys, milk formulas can be prepared. There are three main low-lactose formulas used for hand-rearing macropods

Biolac – There are three formulas; M100 for furless joeys, M150 (transitional milk) for when dense fur has developed, and M200 to use when the animals produces solid dark pellet droppings.

Di-Vetelact – Is a low lactose milk formula. Due to its low energy concentration it has been suggested to add mono or polyunsaturated fat such as canola oil. The addition of saturated fats such as cream can lead to malabsorption of calcium.

Wombaroo Kangaroo Milk – different formulas are used for different stages of development to mimic the changes that occur in the female's milk during lactation (Jackson, 2003).

Cow's milk is not recommended for feeding to marsupials. It has too much fat and lactose, that is poorly digested and results in dehydration and diarrhoea and is therefore a poor substitute for other low-lactose milks. Only small weight gains can be expected if cow's milk is used and the energy intake will be well below the amount required to satisfy the normal appetite.

Gut flora are established by offering dry dirt and fresh grass. Bacteria can be added to the digestive system via faeces (first examined for parasites) from the same species, grinding them up with water and adding the strained mixture (5ml or 1 teaspoon) to the joey's milk (Jackson, 2003).

Feeding Apparatus

Very small joeys can be fed using a syringe fitted with a plastic intravenous catheter or one inch length of infant gastric feeding tube. Macropod joeys, when big enough, can be fed using a plastic feeder bottle (50ml or 100ml) and a kangaroo teat. A small hole can be punctured into the teat using a hot needle.

The recommended temperature for macropod milk is 36°C.

Feeding Routine

Cares should be cautious that the rate at which milk is being squeezed into the mouth of the joey does not exceed the rate at which it is swallowed. Too much milk (fast milk flow) results in accumulation into the pharynx, which is sneezed out of the nostrils.

The number of daily feeds changes as the joey develops. Very young unfurred joeys should be fed every two to three hours around the clock. Once the joey is taking in the required daily volume, night feeds can be reduced.

For furred joeys, the number of feeds is decreased to five and the volume increased per feed. When the joey is fully emerged and fully furred, the number of feeds can be reduced to two or three per day (night feeds are not required). The joey can also have finely cut up carrot and sweet potato, grass, kangaroo cubes and apples.

11.4 Specific Requirements

Joeys are to be stimulated to toilet before or after feeding. This can be done by applying warm water to the cloaca using cotton wool to stimulate urination or defaecation (Jackson, 2003).

Unfurred joeys have faeces like mustard, when just furred it is like toothpaste. When longer fur appears, pellets, should be forming and when fully furred, normal pellets are produced (Jackson, 2003).
Care must be taken not to excessively stimulate the cloaca as it can lead to cloacal prolapse and possibly urethral swelling (Bellamy, 1992, cited in Jackson, 2003). If this occurs, it can be treated with creams such as Panalog (Squibb), Proctoseyl (Rousell) and Topigol (Squibb).
Once the joey is ready to start leaving the pouch, it should be stimulated in a standing position so thatit will eventually learn to defaecate while standing.

The skin of young joeys (unfurred or slightly furred) is susceptible to drying out. To prevent this, a number of moisturisers can be used including; Sorbolene Cream (without glycerine), Wool Fat Bp Standard (pesticides removed), Eucarine ointment, Alpha Keri oil, applied three times per day.

Baby oil does not absorb into the skin as well and tends to rub off/soak into the pouch and lining.

Dehydrated joeys can be given plain boiled water with 5g (one teaspoon) of glucose to 100ml water or 1g electrolyte replacer if available.

Joeys can also be given electrolytes such as lectade and vytrate (10ml to 125ml water) (Jackson, 2003).

11.5 Data Recording

As soon as can be determined, the sex and age of joey should be recorded (this can be determined using growth charts). Tree-kangaroo joeys are not generally weighed until after they are independent of the pouch. Usually the first weight is recorded at one year of age (Blessington and Steenberg, p154).

If hand rearing a Tree-kangaroo, important information should be recorded such as date, body weight, amount of milk formula consumed, general activity and demeanour, characteristic and frequency of defeacation and urination, veterinary examinations and results (Jackson, 2003).

As mentioned in 10.16 (*Growth and Development*), the following measurements should be collected on a daily basis for hand-reared joeys:

- Crown to rump
- Foot – base of claw to heel
- Tail – underside base to tip
- Weight

For parent-reared Tree-kangaroos, observations can be made by keepers. The behaviour of the young and mother-young interactions can be documented. Records of young Matschie's Tree-kangaroos have been kept to show when the limbs of the joey first emerges, first independent feed, first exit from pouch, permanent exit from pouch (Blessington and Steenberg, pg 97).

An ethogram can be constructed of maternal behaviours:

- Pouch cleaning
- Allogrooming
- Moving the young in and out of the pouch
- Locomotion
- Following and approaching behaviour

Instantaneous scan sampling or continuous focal observations can be recorded on a daily basis (Blessington and Steenberg, pg 99)

Behaviour of young can also be documented and may include:

- Movement within pouch
- Forelimbs out of pouch
- Hind limbs out of pouch
- Head out of pouch
- Exit pouch
- Enter pouch

See **Appendix B** for an example of a data recording sheet for maternal behaviour and joey movement and behaviour (Blessington and Steenberg, 2007).

11.6 Identification Methods

Visual identification or implant chips are good methods of identification. Tree-kangaroos should be identified by physical characteristics as well as permanent forms of identification i.e. transponders and tattooing. The Tree- Kangaroo Species Survival Plan has recommended that transponder ID capsules should be implanted between the scapulae, not behind the ear or any other location where grooming occurs (Blessington and Steenberg, 2007).

Facial markings can be used to identify individual animals but in Goodfellow's Tree-kangaroo, tail markings are a reliable source of identification (Blessington and Steenberg, 2007). Photographs and/or drawings should be kept with the animal's specimen record and made available to all keepers, curators and animal health staff (Blessington and Steenberg, 2007).

Ear tagging is not recommended for Tree-kangaroos based on experience of zoos in the past. Ear tags often fall out, or are torn out. Tattooing, although permanent, can only be seen when the Tree-kangaroo is in hand. This method should therefore be used as a secondary means of permanent identification (Blessington and Steenberg, 2007).

11.7 Hygiene

Maintaining a high standard of hygiene is very important to the survival of the Tree-kangaroo joey. Avoid contact with other animals unless you are sure they pose no health risks

If joeys are to be kept in artificial pouches, they need to be washed and disinfected daily as bacteria and yeasts in the warm conditions of the pouch (Jackson, 2003).

A good personal hygiene regime should be implemented by washing and disinfecting hands before and after handling the joey. Antibacterial solution should be used for furless joeys as their immune system is not well developed (Jackson, 2003).

Boiled water should be used when making up formulas for young joeys and any spilt milk, faeces or urine from the joey's skin and fur should be wiped clean as soon as possible and dried. Prepared joey milk should only be heated up once and leftovers discarded

Any feeding equipment and utensils used is to be washed in warm soapy water and sterilised in antibacterial solution such as Halasept or Milton, or boiled for ten minutes. After sterilisation, equipment should be washed in cold water.

Change pouch lining after each feed and carefully toilet the animal before or after feeding to ensure the joey stays warm and dry in its pouch. Joeys that are wet with urine and faeces should be cleaned with a mild a mild soap solution and dried thoroughly. If the fur becomes soiled, wash it under warm tap water and dry thoroughly.

Several diseases can parasites can occur during hand-rearing, especially when proper hygiene standards are not met.

Yeast infection (*Candida and Torulopsis*) can build up. This is particularly the case when numbers of bacteria in the gut have been reduced by antibiotics (Booth, 2002, cited in Jackson, 2003). As a result, the animal is reluctant to suck, produce greenish faces and saliva that appears rusty when the mouth is wiped after feeding. Lesions can also occur in the mouth. This can be treated with Nystatin oral drops.

11.8 Behavioural Considerations

It is important that zoos are successful in parent-rearing tree-kangaroo joeys. It is generally accepted that a furless joey with ears still back and eyes closed will be very difficult to raise (Miller 1999, cited in Blessington and Steenberg, 2007 pg 164).

The first thing to consider is whether or not it is feasible to attempt to return the joey to the dam's pouch, especially if the dam is in good health and the joey is not injured Blessington and Steenberg, 2007 pg 164).

If hand-raising a joey, care must be taken that the joey does not become too attached to the raiser as this will make the weaning process more difficult.

Documented behavioural development of a *D matschiei* joeys reveal that young first emerge part of their bodies from the pouch at ~ 20 – 22 weeks of age, first feed independently at ~ 27 weeks of age and completely exit the pouch after ~ 29 weeks. The joey will permanently vacate the pouch at 41 weeks of age.

Although the sequence of developmental behaviours is similar to terrestrial kangaroos, the age at which tree-kangaroos permanently vacate the pouch is significantly older than terrestrial kangaroos. The developmental schedule of *D. matschiei* joeys is similar to another arboreal marsupial, the koala (*Phascolarctos cinereus*) (Blessington and Steenberg, 2007 pg 97).

When first leaving the pouch, the young *D. matschiei* will go through an active period of exploration which decreases with maturity. For most of the development period, the joey will be responsible for maintaining contact with the mother (Blessington and Steenberg, 2007 pg 97).

It is also important to minimise stress as this is the most common cause of illness in macropods. Stress can be triggered by inappropriate temperature, constant handling and shock (if the joey has been separated from/lost the mother), being fed by different people, and unusual and sharp noises, such as traffic and dogs.. Smells of predators should also be avoided.

Indicators of social and environmental stress in tree-kangaroos include arm sucking, heavy salivation, clear nasal discharge, tail swishing, hyperactivity, withdrawal, changes in appetite, frequency of defaecation, consistency of faeces and vocalisation (Blessington and Steenberg, 2007 pg 98).

Prior being shipped to other institutions, it is recommended that joeys be separated from their mothers for a minimum of 30days. Shipping is one of the most stressful and difficult times for an animal and the experience can have a lasting effect on the tree-kangaroo's behaviour (Blessington and Steenberg, 2007 pg 98).

11.9 Use of Foster Species

Cross fostering involves the transfer of pouch young of a target species into the pouch of a recipient with a pouch young of similar size. The recipient then raises the young as its own (Jackson, 2003).

Fostering has been used with success between different species of macropods, even between species of different genera. Fostering of rare Victorian Brush-tailed rock wallaby joeys into the pouches of Tammar and yellow-footed rock wallabies has been achieved with some success in Australia (Blessington and Steenberg, 2007 pg 134).

There has been no cross fostering attempted for tree-kangaroo species, but it is expected that it will be more complex than cross fostering between the wallaby species.

11.10 Weaning

Young tree-kangaroo joeys appear to be ready to be weaned at about 15-18 months of age. The results of faecal steroid assay studies also support this age for weaning. If the young is kept in the same enclosure as the mother it will continue to try to suckle, although it is unknown whether the joey obtains any milk. For these reasons, the Tree-Kangaroo Species Survival Plan recommends that joeys remain with the mother until 15-18months age.

A female tree-kangaroo may become aggressive towards her young as the weaning age approaches. One female was observed biting the foot of her 14 month old male joey

Weaning can be a period of high stress for both the dam and joey. The procedure should be planned well ahead of time and the new location for the joey made ready. If possible, the new location should be well away from the dam.

The age at which natural weaning occurs seems to vary considerably. Some females are very tolerant of their young who still attempt to suckle at 18 months of age. There is no real data on variation in weaning behaviour between male and female joeys.

Prior to weaning, a joey must be well conditioned and comfortable eating out of its own food dish. It is easier for the joey if there is continuity in care. The keeper or keepers, the joey is most familiar with should continue routine husbandry until the trauma of weaning has lessened. Keepers can approach the joey and offer favourite food items to help in the weaning process (Blessington and Steenberg, 2007 pg 163).

The dam's and joey's diet, eating behaviour and frequency/consistency of faeces should be monitored on a daily basis. A day or two without food is expected until the joey adjusts to the new circumstances. Favourite browse can be given to encourage the joey to eat something (Blessington and Steenberg, 2007 pg 163).

11.11 Rehabilitation and Release Procedures

In general, before a macropod is ready for release it needs to satisfy a number of criteria (Booth, 1999, cited in Jackson, 2003).

- Be fit and healthy (physically and mentally)

- Be maintaining condition on natural foods
- Able to recognise its own species
- Be familiar with the social behaviour of its species (it should ideally be housed with members of it own species)
- Show appropriate levels of fear of humans and predators
- Show no evidence of being imprinted on humans

Lumholtz's Tree-kangaroos have been successfully cared for and released into the wild on the Atherton Tablelands (QLD). When young Lumholtz's Tree-kangaroos were ready to be released from the carer's property, the animals would return several times until confident enough to venture out by into the rainforest themselves (Blessington and Steenberg, 2007).

In several instances, Tree-kangaroo joeys died because of hyperthermia and inability to cope with toxins found in leaves. It is important to ensure that animals have the correct levels of protozoa in the gut to be able to digest toxins. This can be achieved by obtaining the stomach contents of a euthanased adult tree-kangaroo (from where the esophagus meets the stomach).

In wild tree-kangaroos, the joeys lick the mother's mouth so that they can be inoculated with the essential bacteria to be able to digest leaves.

When releasing tree-kangaroos, it is helpful to allow the animal to return to its pen at night until it becomes established in the natural habitat. This is important, especially if there is a male tree-kangaroo already in the territory and the release animal needs to avoid confrontation/conflict (Blessington and Steenberg, 2007).

Because Goofellow's Tree-kangaroo is native to Papua New Guinea, it is vital that any rehabilitation and release programs be conducted in-situ. There is currently a Tree-Kangaroo Conservation Program (TKCP) in PNG which involves the community in Tree-kangaroo conservation. Tree-kangaroos are also radio-collared and tracked to learn more about their movements, activities and home range.

The TKCP's mission is:

The Tree Kangaroo Conservation Program in Papua New Guinea is working to establish a conservation area of at least 150,000 acres on the Huon Peninsula through community-based action that includes scientific research, education, community health, and conservation outreach.

(TKCP Annual Report - www.zoo.org/conservation/pdf_bin/treeroo_2005.pdf)

12 Acknowledgements

To be completed…

References

Blessington J and Steenberg J (eds): Tree Kangaroo (Dendrolagus spp.) Husbandry Manual 3rd Edition, 2007 (Tree Kangaroo Species Survival Plan©)

Currumbin Wildlife Sanctuary - www. currumbin-sactuary.org.au

Edwards, M.S. and A. Ward (2001) Nutrition, Food Preparation and Feeding. In *Tree Kangaroo Species Survival Plan*: Steenberg J., and Blessington J. eds. American Association of Zoos and Aquariums.

Flannery T. (1995) *Mammals of New Guinea*. Reed Books, Chatswood NSW

Flannery T. F., Martin, R., Szalay, A. (1996) *Tree-Kangaroos – A Curious Natural History*, Reed Books. Port Melbourne, VIC

George, G. G (1982) Tree-kangaroos Dendrolagus spp: their management in captivity: The Management of Australian mammals in captivity (Ed. D.D. Evans). *Proceedings of the Scientific Meeting of the Australian Mammal Society, Healesville, Victoria, Feb 1979*.

IUCN (2006) www.iucn.org.au

Jackson, S. (2003) *Australian Mammals - Biology and Captive Management*. CSIRO, Collingwood VIC.

Martin, R.W. (2005) Tree-*kangaroos of Australia and New Guinea*. CSIRO Publishing, VIC.

Melioidosis Fact Sheet – www.health.qld.gov.au

Steenberg 1993 "Basic Care and Housing Standards" For Tree-kangaroos

Spielman D. (1994) – Veterinary Aspects of Macropodidae in Captivity

Taronga Zoo – Standard Operating Procedures for *Dendrolagus goodfellowi*.

Veterinary Quarantine Centre & Life Sciences Policy – Zoological Parks Board of NSW

Zoological Parks and Gardens Board of Victoria (2004) Goodfellow's Tree-Kangaroo Fact Sheet. – www.zoo.org.au

13 Bibliography

Jackson, S.M. (2002) *Standardizing captive-management manuals: guidelines for terrestrial vertebrates* revised, in International Zoo Yearbook (2003) 38: 229-243, The Zoological Society of London, London.

14 Glossary

(of terms used that may not be easily understood without explanation/definition)

Alopecia	Hair loss, baldness
Ectoparasites	External parasites e.g ticks, leaches, fleas
Pelage	Fur or hair covering on the body
Polygynous	Mating system where males breed with several females
Crepuscular	Period of activity during the day, at dusk and dawn

15 Appendix

Appendix A
15.1 Material Safety Data Sheets (MSDS)

15.1.1 F10SC Veterinary Disinfectant

F10SC VETERINARY DISINFECTANT PRODUCTS:

F10SC Veterinary Disinfectant (Reg No G 3070, Act 36/1947)
F10SCXD Veterinary Disinfectant/Cleanser (Reg No G 5073, Act 36/1947)

TESTING STANDARDS, PERFORMANCE, SAFETY AND APPROVALS

PERFORMANCE AND SPEED OF KILL OF F10SC VETERINARY DISINFECTANTS

Micro- organism	Dilution	Contact Time
Gram Positive bacteria:		
e.g. Staphylococcus aureus	1:1000 water	2 minutes
Gram Negative bacteria:		
e.g. Pseudomonas aeruginosa	1:500 water	2 minutes
Fungi,Yeast, Moulds:		
e.g. Candida albicans	1:500 water	15 minutes
Fungal spores:		
e.g. Aspergillus niger	1:250 water	30 minutes
Virus:		
e.g. Newcastle Disease Virus	1:500 water	10 minutes
Rabies	1:500 water	30 minutes
Infectious Bursal Disease	1:250 water	20 minutes
Parvovirus	1:125 water	30 minutes
Bacterial spores:		
e.g. Bacillus subtilis spores	1:125 water	30 minutes

TESTING STANDARDS

- South African Bureau of Standards
- South African Institute for Medical Research
- South African Vaccine Producers (Pty) Ltd
- University of Pretoria, Poultry Reference Laboratory
- Agricultural Research Council, Veterinary Institute, Onderstepoort
- Agricultural Research Council, Animal Improvement Institute, Irene
- Complies with AFNOR standards, as well as EN Standards for chemicals and antiseptics within the EU

SAFETY

F10SC VETERINARY DISINFECTANT PRODUCTS ARE:

non-toxic

- acute oral and dermal LD50 > 5000mg/Kg
- inhalation - non toxic

non-irritating
- Proven in supervised independent field trials
- score of zero on intact and abraded skin when tested to SABS method 671

free rinsing
- complies with (SABS 1593 6.11).

water insoluble matter content
- 0,3g/litre (SABS 1593 6.12)

biodegradable
- zero hazard rating to EU standards

non-corrosive
- passed SABS 1615 after 30 days

APPROVALS
- SABS Approval Mark 636 and 639, for Efficacy and Quality Assurance
- SABS Mark 1828. Chemicals for use in the Food Industry approval to EU Standards
- SABS Standards Act 29/1993 Compulsory registration of disinfectants
- SA, National Department of Agriculture, Stock Remedies Act 36 for surfaces, equipment and air spaces
- UK, DEFRA for Diseases of Poultry Order and General Orders.
- NZ, MAF approved for food, beverage, farms, and factories.
- Australia, NRA, TGA, AQIS for surfaces, equipment and air spaces
- Uruguay, Min of Ag for surfaces, equipment and air spaces

SECTION 1A PRODUCT IDENTIFICATION

Trade Name:	**F10SC Veterinary Disinfectant** **F10SCXD Veterinary Disinfectant/Cleanser** **F10 Wipes** **F10 Skin Prep Solution**
Product Use:	**Multi-purpose disinfectant and steriliser**
Chemical type:	Quaternary ammonium and biguanidine compounds (5,8%), non-toxic ampholytic surfactants and sequesterants

SECTION B SUPPLIERS IDENTIFICATION

Name:	Health and Hygiene (Pty)Ltd
Address:	P.O.Box 347 Sunninghill 2157 South Africa
Telephone No:	011 474 1668
Fax No:	011 474 1670

SECTION 2 HAZARDOUS INGREDIENTS

Hazardous Ingredients:	None
Percentage of weight:	N/A
LD50 of Material:	> 5000 mg/kg

SECTION 3 PHYSICAL DATA

Physical State:	Liquid
Appearance and Colour:	F10SC - colourless, slight natural odour F10SCXD - green, pine fragrance F10 Skin Prep - blue, natural odour

Evaporation Rate:	As Water
Boiling Point:	110° C
Freezing point:	-20° C
% Volatile (by weight):	NIL
Solubility in water (20° C):	Soluble
pH:	7 approximately
Specific gravity:	1.00 @ 20° C

SECTION 4 FIRE & EXPLOSION DATA

Flammability:	Non-Flammable
If Yes, Under Which Conditions:	None

SECTION 5 REACTIVITY DATA

Chemical Stability:	Stable
Incompatibility:	If mixed with strong alkalis, or reduce disinfectant qualities
Hazardous Decomposition Products:	If burnt may produce irritating fumes

SECTION 6 TOXOCOLOGICAL PROPERTIES

Exposure Route:	Degree of Hazard
- Skin Contact:	Low: Concentrate may act as mild degreasant to sensitive skin
- Eye Contact:	Low: Will cause irritation but not serious damage
- Inhalation Acute:	Low: No significant hazard
- Inhalation Chronic:	Low: No significant hazard
- Ingestion:	Low: Substantial Ingestion may cause irritation to mouth, throat and digestive tract

SECTION 7 PREVENTATIVE MEASURES

Personal Protective Equipment:	Not required
Eye Protection:	Avoid contact with eyes
Leak & Spill Procedure:	Soak up onto inert material or may be flushed to drain with copious amounts of water
Handling Procedures:	Ensure good industrial hygiene
Storage Requirements:	Store between 0° - 30° C in dry conditions

SECTION 8 FIRST AID MEASURES

Inhalation:	Non-toxic: avoid long term inhalation of neat liquid. Remove to fresh air
Eye Contact:	Rinse eyes with water. Seek medical advice if necessary
Skin Contact:	Wash affected area with soap and water
Ingestion:	DO NOT induce vomiting. Give milk, or water to drink. Seek medical advice where necessary.

15.1.2 Unique Pine

1. IDENTIFICATION OF THE MATERIAL AND SUPPLIER

PRODUCT NAME:	**UNIQUE PINE**
OTHER NAMES:	**NONE**
RECOMMENDED USE:	**Commercial Grade Disinfectant.**
SUPPLIER NAME:	**CAMPBELL CLEANTEC (ABN 92 009 657 489)**
ADDRESS:	**32 PERIVALE STREET, DARRA, QLD, 4076**
TELEPHONE: GENERALENQUIRIES:	**+ 61 7 3710 3200**
CUSTOMER SERVICE:	**1800 077 240**
FAX: GENERAL ENQUIRIES:	**+ 61 7 3710 3210**
CUSTOMER SERVICE:	**+ 61 7 3710 3207**
EMERGENCY TELEPHONE NUMBER: AUSTRALIA:	**1800 628 724 (ALL HOURS)**
INTERNATIONAL: + 61 7 3710 3184 (ALL HOURS)	

2. HAZARDS IDENTIFICATION

HAZARD CLASSIFICATION: Classified as **non-hazardous** according to the criteria of NOHSC.
HAZARD CATEGORY: NONE
RISK PHRASES: NONE
SAFETY PHRASES: NONE
The information contained in this MSDS is specific to the product when handled and used neat. This product when diluted may not require the
same control measures as the neat product. Check with your technical representative if in doubt.

3. COMPOSITION / INFORMATION ON INGREDIENTS

INGREDIENT	CAS No.	PROPORTION (% w/w)
*The ingredients below are considered either **hazardous, dangerous goods or poison scheduled** according to the criteria of NOHSC, ADG Code and SUSDP (respectively) at the levels used in the product.*		
NO INGREDIENTS		
*The ingredients below are **not** considered either **hazardous , dangerous goods or poison scheduled** according to the criteria of NOHSC, ADG Code and SUSDP (respectively) at the levels used in the product.*		
non-ionic surfactant		<10%
antimicrobial agent		<10%
perfume		<10%
dyes		<10%
alkaline salt		<10%
water		>60%

4. FIRST AID MEASURES

INGESTION:	Immediately remove product from the mouth and rinse mouth out with water. Contact a Doctor or the Poisons Information Centre in your capital city for further advice.
EYE CONTACT:	Irrigate with copious quantities of water for at least 15 minutes and seek medical attention if effects persist.
SKIN CONTACT:	Remove contaminated clothing and wash skin thoroughly with water. Seek medical attention if the effects persist.
INHALATION:	Remove from source of exposure to fresh air. Remove contaminated clothing and loosen remaining clothing. Allow patient to assume most comfortable position. Seek medical assistance if effects persist.
FIRST AID FACILITIES:	Potable water should be available to rinse eyes or skin. Provide eye baths and safety showers.
NOTES TO	Treat symptomatically

SUITABLE EXTINGUISHING MEDIA:	Water spray, foam, carbon dioxide or dry chemical powder
HAZARDS FROM COMBUSTION:	The product is non-combustible; however, the packaging material may burn to emit noxious fumes.
PRECAUTIONS FOR FIRE FIGHTERS AND SPECIAL PROTECTIVE EQUIPMENT:	Fire fighters should wear self-contained breathing apparatus to minimise risk of exposure to vapour or products of combustion
HAZCHEM CODE:	NONE
PHYSICIAN:	

5. FIRE FIGHTING METHODS

6. ACCIDENTAL RELEASE MEASURES

EMERGENCY PROCEDURES:	Spillages are slippery. Ensure adequate ventilation. Keep spectators away – rope off the area. Avoid accidents, clean up immediately. Wear protective equipment to prevent skin and eye contamination.
METHODS AND MATERIALS FOR CONTAINMENT AND CLEAN UP:	Contain the spill and prevent run off into drains and waterways. Large spills: absorb with dry earth, sand or other similar material. Collect and seal in properly labeled drums for disposal in an area approved by local authority by-laws. Wash area down with excess water to remove residual material. Small spills: may be safely mopped up and area washed with excess water. Incineration of disposed material is not recommended, as it is unlikely to adequately burn.

7. HANDLING AND STORAGE

PRECAUTIONS FOR SAFE HANDLING	Keep containers closed at all times - check regularly for leaks or spills. Transport and store upright. Avoid eye contact and repeated or prolonged skin contact. Do not eat, drink or smoke in contaminated areas. Always remove contaminated clothing and wash hands before eating, drinking, smoking or using the toilet. Wash contaminated clothing and other protective equipment before storage or re-use.
CONDITIONS FOR SAFE STORAGE:	Store in the original container, in a cool dry well-ventilated area out of sunlight and away from other chemicals and foodstuffs. Keep containers closed when not in use to ensure contamination does not occur. Do not combine part drums of the same product, as this may be a source of contamination. Do not mix with other chemicals

8. EXPOSURE CONTROLS / PERSONAL PROTECTION

NATIONAL EXPOSURE STANDARDS:	No value assigned for this specific material by the National Occupational Health and Safety Commission (Worksafe Australia).
BIOLOGICAL LIMIT VALUES:	No biological limit allocated.
ENGINEERING CONTROLS:	Natural or local exhaust ventilation should be adequate under normal use conditions. Keep containers closed when not in use.
PERSONAL PROTECTIVE EQUIPMENT:	Protective equipment is recommended: PVC or nitrile rubber gloves, safety glasses and safety shoes. Observe good standards of hygiene and cleanliness. Trousers, long sleeved shirt and closed in shoes or safety footwear should be worn as a general precaution

9. PHYSICAL AND CHEMICAL PROPERTIES:

APPEARANCE:	Clear, yellow mobile liquid.
ODOUR:	Pine odour.
PH (NEAT):	11.0 - 11.5
SPECIFIC GRAVITY OR DENSITY:	1.04
VAPOUR PRESSURE:	No information available.
PERCENT VOLATILES:	No information available.
BOILING POINT / RANGE:	Approx. 100°C
FREEZING / MELTING POINT:	No information available.
SOLUBILITY:	The product is water based and is fully soluble in water.
FLASH POINT:	Non flammable.
FLAMMABILITY LIMITS:	Non flammable.
IGNITION TEMPERATURE:	No information available.
SHELF LIFE:	2 years from manufacturing date (when stored as directed)
OTHER:	None.

10. STABILITY AND REACTIVITY

CHEMICAL STABILITY:	Stable under normal conditions of use. The shelf life is 2 years.
CONDITIONS TO AVOID:	Do not combine part drums of the same product, as this may be a source of contamination.
INCOMPATIBLE MATERIALS:	Anionic detergents, chlorine. Do NOT mix with detergents or other chemicals.
HAZARDOUS DECOMPOSITION PRODUCTS:	The packaging material may burn to emit noxious fumes.
HAZARDOUS REACTIONS:	None known.

11. TOXICOLOGICAL INFORMATION

No adverse health effects expected if the product is handled in accordance with this Safety Data Sheet and the product label.
Symptoms or effects that may arise if the product is mishandled and overexposure occurs are:

ACUTE EFFECTS	
INGESTION:	No adverse effects expected, however large amounts may cause nausea and vomiting. Capable of causing irritation if swallowed.
EYE CONTACT:	Capable of causing irritation.
SKIN CONTACT:	Capable of causing irritation with long and repeated skin contact
INHALATION:	Available information indicates that there is little or no hazard when vapours from the product are inhaled
LONG TERM EFFECTS:	No information available.
ACUTE TOXICITY / CHRONIC TOXICITY:	No LD50 data available for the product.

12. ECOLOGICAL INFORMATION

ECOTOXICITY: Avoid contaminating waterways.
PERSISTENCE AND DEGRADABILITY: Surfactants are readily biodegradable to AS4351.
MOBILITY: No information available.
OTHER: None.

13. DISPOSAL CONSIDERATIONS

DISPOSAL METHODS: Empty containers should be forwarded to an approved agent for recycling. Avoid unauthorised discharge to sewer.
SPECIAL PRECAUTIONS FOR LANDFILL OR INCINERATION: The product is suitable for disposal by landfill through an approved agent. Incineration of the product is not recommended, as it is unlikely to adequately burn.

14. TRANSPORT INFORMATION

ROAD AND RAIL TRANSPORT: Not classified as Dangerous Goods by the criteria of the Australian Dangerous Goods Code (ADG Code) for transport by Road and Rail.

UN NUMBER: NONE
UN PROPER SHIPPING NAME: NONE
CLASS AND SUBSIDIARY RISK(S): NONE
PACKAGING GROUP: NONE
HAZCHEM CODE: NONE
SEGREGATION DANGEROUS GOODS: NONE
MARINE TRANSPORT: Not classified as Dangerous Goods by the criteria of the International Maritime Dangerous Goods Code (IMDG Code) for transport by sea.
UN NUMBER: NONE
UN PROPER SHIPPING NAME: NONE
CLASS AND SUBSIDIARY RISK(S): NONE
PACKAGING GROUP: NONE
AIR TRANSPORT: Not classified as Dangerous Goods by the criteria of the International Air Transport Association (IATA) for transport by air.

UN NUMBER:	NONE
UN PROPER SHIPPING NAME:	NONE
CLASS AND SUBSIDIARY RISK(S):	NONE
PACKAGING GROUP:	NONE

15. REGULATORY INFORMATION

POISONS SCHEDULE (AUST.):	Not scheduled.
APVMA STATUS:	Not relevant.
TGA STATUS:	Commercial Grade Disinfectant.
AICS STATUS:	All the constituents of this product are listed.
AQIS STATUS:	Not relevant.
OTHER:	None.

16. OTHER INFORMATION

GENERAL INFORMATION:	None.
MSDS ISSUE NUMBER:	003
MSDS ISSUE DATE:	21 JULY 2005

In any event, the review and, if necessary, the re-issue of a MSDS shall be no longer than 5 years after the last date of issue.

REASON(S) FOR ISSUE: Update to conform to requirements of NOHSC:2011(2003); 16-header .
THIS ISSUE NUMBER REPLACES ALL PREVIOUS ISSUES.

LITERARY REFERENCE:
SOURCES FOR DATA:
LEGEND:

AICS	Australian Inventory of Chemical Substances
APVMA	Australian Pesticides and Veterinary Medicines Authority
AQIS	Australian Quarantine and Inspection Service
AS	Australian Standard (as issued by Standards Australia)
MSDS	Material Safety Data Sheet
NOHSC	National Occupational Health and Safety Commission
STEL	Short Term Exposure Limit - A 15 minute TWA exposure which should not be exceeded at any time during a working day even if the eight-hour TWA average is within the TWA exposure standard. Exposures at the STEL should not be longer than 15 minutes and should not be repeated more than four times per day. There should be at least 60 minutes between successive exposures at the STEL.
TGA	Therapeutic Goods Administration
TLV	Threshold Limit Value - TLV is a proprietary name registered by the American Conference of Governmental Industrial Hygienists (ACGIH) and refers to airborne concentrations of substances or levels of physical agents to which it is believed that nearly all workers may be repeatedly exposed day after day without adverse effect.
TWA	Time Weighted Average - The average airborne concentration of a particular substance when calculated over a normal eight-hour working day, for a five-day working week.

Appendix B

15.2 Behaviour Data Recording Sheets

15.2.1 Behaviour Data Sheet for Dam

Clean pouch	Head in pouch, licks edge of pouch, or holds pouch open with forelimb(s) and licks wall of pouch
Tongue in and out	Associated with pouch cleaning. Intermittently lifts head from pouch and moves tongue in and out.
Reposition	Readjusts body to allow young access to the pouch
Prevents young from entering pouch	Turns front of body away from young, pushes young away with front forelimbs, or repositions body to make pouch inaccessible
Vigorous groom/push	Mother grooms/pushes young while in pouch; young exits pouch.

15.2.2 Behaviour Data Sheet for Joey

No movement of pouch (young not visible)	No movement of pouch and young is not visible within pouch
No movement of pouch (young is visible)	No movement of pouch and young is visible within pouch.
Movement of pouch (young not visible)	Movement of pouch and young is not visible within pouch
Movement of pouch (young is visible)	Movement of pouch and young is visible within pouch
Forelimb(s) out	One or both forelimbs of young are visible outside pouch
Hindlimb(s) out	One or both hindlimbs of young are visible outside pouch
Head out	Head of young is out of pouch.
Unknown part of body out	Unidentified body part of young is out of pouch.
Exit pouch	Young emerges completely from pouch.
Enter pouch	Young returns to pouch (one or more body parts may be out of pouch).
Mill	Young locomotes within one meter of mother.
Climb	Young climbs on specified object (e.g. mother).
Fall	Young falls from branch or limb.
Hang	Young hangs by forelimbs from branch or limb.
Suckle from outside pouch	Young puts head in pouch for an extended time (slight head bobbing movement by young).
Head in pouch	Young puts head in pouch (no bobbing movement of head).
Attempted pouch entry.	Young places head in pouch, body does not enter pouch completely
Grab/pull	Young or mother grabs or pulls at object (e.g. other). Includes clutching tail.
Wrestle	Mother and young face each other, push each other with forelimb(s).
Touch	Mother or young touches a body part of other with forelimb(s).
Follow	Mother or young follows other who has initiated locomotion
Approach	Mother or young approaches other who is station
Sniff/nose	At close range, mother or young sniffs or contacts body of other (includes sniffing an inanimate object such as food).

Appendix C

15.3 Hand-rearing Formulas and equipment

Wombaroo® Marsupial Formulas

Wombaroo Food Products
Marsupial Milk Replacer P.O. Box 151
Glen Osmond, S.A. 5064, Australia
Phone: (08) 8391-1713
Email:wombaroo@adelaide.on.net
www.wombaroo.com.au

Biolac® Resource International
Marsupial Milk Replacer

Divetalac®
Low Lactose Animal Milk Replacer
Sharpe Laboratories
12 Hope Street
Ermington, NSW 2115, Australia
Phone: (02) 9858-5622
www.australianwildlife.com.au

Biolac® and teats

Geoff and Christine Smith
P.O. Box 93
Bonnyrigg, NSW 2177, Australia
Phone: (02) 9823-9874
Peewee's Pampered Pet Products

Wombaroo® teats and bottles
www.users.on.net/wombaroo

Appendix D

15.4 Facility Review Checklist (from Blessington and Steenberg 2007)

1. Heating and cooling, humidity control
2. Ventilation
3. Lighting
4. Structural strength of building(s)
5. Size of animal enclosure and holding area
6. Construction of enclosure and holding area
7. Sanitation of enclosure and holding area (substrate, feeders, waterers, fecal removal)
8. Drainage
9. Security
10. Overall appropriateness of enclosure and holding area for tree kangaroos

Facilities – Outdoor

1. Shelter from sun
2. Shelter from rain, wind and cold temperatures
3. Size of animal enclosure and holding area
4. Construction of animal enclosure and holding area
5. Sanitation of enclosure and holding area (substrate, feeders, waterers, fecal removal)
6. Keeper access
7. Drainage
8. Protection from predators
9. Security
10. Overall appropriateness of enclosure and holding area for the species

Final comments:
Signature: _____
Date: _____

15.5 Exhibit Checklist (from Blessington and Steenberg 2007)

The following checklist should be used when designing a new exhibit, or modifying an existing exhibit for tree kangaroos. It is also recommended that you refer to this checklist when planning to put tree kangaroos into a temporary holding situation, such as quarantine.

Of special importance is to consider if the tree kangaroos will be exposed to construction activity in, or near their location…noise can cause considerable stress, and health problems

The purpose of the checklist is to help you answer the following questions before introducing tree kangaroos into the area in question.
1. Is the exhibit environment safe for the animals?
2. Is the exhibit environment safe for the Keepers?
3. Is the holding facility in good condition?
4. Is the vegetation in/around the exhibit appropriate?
5. Are environmental controls maintained?
6. Is the exhibit conducive to operant conditioning and training needs?

When planning a new exhibit, use this checklist throughout the design and construction phase. Prior to receiving tree kangaroos for quarantine, the checklist can provide valuable information on how to set-up the quarantine space for optimal holding conditions for the animals. Regarding quarantine -

did you receive an Animal Data Transfer, Enrichment and Training forms from the shipping institution?)
All concerned parties, Keepers, Curators and Animal Health Staff should be aware of and involved in the completion of this checklist.

Check Yes or No for each item:

1. Have tree kangaroo environmental requirements been met?
Yes No
___ ___ a) temperature, supplemental heating, solar gain problems, cooling capacity.
___ ___ b) humidity.
___ ___ c) lighting.
___ ___ d) HVAC equipment in place and operating properly.
___ ___ e) other concerns_____.

2. Does the space meet the animal(s) needs? Have you reviewed the AZA Minimum Standards for Macropods?
Yes No
___ ___ a) flight distance from public.
- can the public reach the animals?
- can the public surround the exhibit?

___ ___ b) escape routes (dominant/subordinate interactions) will area contain animal?
___ ___ c) have spatial requirements been met for adequate social interactions .
- is there adequate vertical as well as horizontal space?
- can the tree kangaroos get above the head of the Keeper?

___ ___ d) seclusion/retreat areas; is there adequate cover from public, staff, other animals?
___ ___ e) is ideal load and maximum load adequate for number of animals?
___ ___ f) are there enough doors, e.g. two doors between animals and outside, and for Keeper access?
___ ___ g) is there adequate off-exhibit holding (location, access for animals and Keepers)?
___ ___ h) is there adequate space for reproductive needs?
- males need quality long-term holding space.
- where will joeys be held when weaned?

___ ___ i) is there adequate space for young; is it suitable and safe? Is there too much space?
___ ___ j) are there health or seasonal concerns that must be considered?
___ ___ k) can the animals be isolated, or held as individuals?
___ ___ l) can the animals be easily captured for transfer and/or veterinary procedures?

3. Is the exhibit appropriate for tree kangaroos?
Yes No
___ ___ a) shelter from wind and rain, shade from sun.
___ ___b) appropriate substrate (should be a soft substrate; concrete can be covered over with sand, wood chips, straw, etc.).
___ ___ c) furniture (climbing structure, perches, vines, shrubs, logs, stumps) should not be smooth, they should have rough surfaces for gripping.
___ ___ d) water features (pools, streams) must only be a few inches deep.
___ ___ e) are there seasonal weather conditions to consider or avoid (heat/cold)?
___ ___ f) escape concerns:
- moat size, depth, and width.
- position of trees/perches that could allow a leap out of the exhibit.
- half walls – could a tree kangaroo reach up and climb over it?

___ ___ g) are the physical capabilities of the tree kangaroos considered based on their age(s)? Are they young and agile, old and slow, or somewhere in between?

4. Are there potentially dangerous enclosure features that need to be modified?
Yes No
___ ___ a) fence lines (is fence secured; check for gaps at top, bottom, corners), moats, or pools.
___ ___b) a secure containment; no gaps in netting, doors, etc., no vegetation bridging moats, or other escape potential.
___ ___ c) all barriers clearly marked during introduction (flagging, burlap, glass wax/windows).
___ ___ d) protection from heat sources, electrical outlets, light fixtures, etc.
___ ___ e) checked for sharp projections, spaces to get caught in (head, body, and legs).
___ ___ f) are there pipes, conduit, ledges, door frames that could be climbed?
___ ___ g) toxic plants - have Horticulture and Health departments checked for potential toxicity?

5. Are there appropriate food and water stations available?
Yes No
___ ___a) feeding stations (elevated, spaced out, adequate number, appropriate locations).
Important Note: Food and water should not be accessible to by birds.
___ ___ b) water (location, accessibility, quality, and quantity).
___ ___ c) accessible for animal Keeper, easily cleaned feeding stations.
___ ___ d) are all necessary dietary items available at the Commissary? Will these items be on hand in the unit when the animal arrives?
___ ___ e) approved storage facilities and containers for food items.
___ ___ f) food preparation area, equipment/requirements (e.g. refrigerator).
___ ___ g) approved browse list and location to acquire browse from.
___ ___ h) browse storage

6. Introductions.
Yes No
___ ___ a) what type of introduction are you planning?
- animals to new exhibit?
- new animal for pairing up?
- reintroduce male to female for breeding?
- weaned joey to holding area?

___ ___ b) will there be other cage mates? same species or another species?
___ ___ c) is there an introduction plan for tree kangaroos to the exhibit? To cage mates?
- is there a “howdy” set-up for initial introduction?
- do windows need to be “waxed” or flagged?
- have all escape routes been identified and remedied?
- have all departments been advised?
- is staffing adequate to allow for Keeper observations?
- is hot wire being used, what is the voltage, have the animals been
- previously exposed to hot wire & what were the reactions?

7. Is the exhibit Keeper ready?
Yes No
___ ___ a) have the Keepers who will be working the exhibit been thoroughly briefed and trained on all equipment (e.g. HVAC equipment)?
___ ___ b) ease of cleaning – accessibility, daily routine, location of hoses, tools, locks, doors.
___ ___ c) ability to transfer animals if needed, squeezes, crating area, etc.
___ ___ d) double door system, visual access from service areas.
___ ___ e) Keeper’s safety insured (safeguards for aggressive male tree kangaroos).
___ ___ f) proper key core installed.

8. Has the exhibit been checked for construction materials left behind? (use magnet or metal detector for hardware).
Yes No
___ ___

9. What environmental enrichment factors or concerns need to be considered?
Yes No
___ ___

10. Is the tree kangaroo being trained through operant conditioning for any procedures, including transfer? If yes, what is needed for set-up, for now and in the future?.
Yes No
___ ___

11. Visitor viewing area
Yes No
___ ___ foliage near exhibit; checked for toxicity?
___ ___ are feeding stations in view?
___ ___ is there potential for a "Keeper Talk"?

12. Have other Keepers with tree kangaroo experience been contacted to review the area?
Yes No
___ ___

13. Pest Control (review with Pest Control Officer)
Yes No
___ ___ bait stations (non-toxic baits).
___ ___ are trash receptacles nearby and covered?
___ ___ is there a regular schedule to check for pests (seasonal problems)?

14. Before introducing tree kangaroos to a new exhibit, have all the departments been notified?
Yes No
___ ___ Animal Health
___ ___ Education
___ ___ PR/Marketing
___ ___ Admissions

15. Is staffing adequate to allow for keeper observations and/or have trained observers been arranged for?
Yes No
___ ___

Ideally, when preparing a new exhibit for a tree kangaroo, whether it is new construction, or a modification of an existing exhibit, this list will help prevent problems for the animals and the keepers.

Use this checklist as a guide, to make actual site inspections by all concerned Staff (Keepers, Area Supervisors, Curators, Animal Health Staff). As the exhibit is completed, reviewed and approved, it is recommended that each party sign off in the spaces provided below:

Completed by:_____ Completed by:_____
Keeper of new exhibit Senior Keeper (Supervisor)
of new exhibit
Reviewed by: _____ Reviewed by: _____
Keeper of current exhibit Senior Keeper (Supervisor)
of current exhibit
Approved by: _____ Approved by:_____
Animal Health Department Curator
35

Appendix E

15.6 Approved Browse Species for Tree-Kangaroos at Taronga Zoo

Appendix F

15.7 Annual Cycle of Maintenance

	Reference	**Jan**	**Feb**	**Mar**	**Apr**	**May**	**Jun**	**Jul**	**Aug**	**Sept**	**Oct**	**Nov**	**Dec**
Breeding	10.6												
Vet Check	8.2, 8.3												
Substrate Change/top up	4.1, 5.1												
Enclosure Repairs	4.1-4.9												
Behavioural Enrichment	9.7												
Weeding/ Pruning/Planting	4.1-4.9												
Disinfect surfaces/platforms	5.1												